REALTEK SINGLE CHIP OCTAL 10/100 MBPS FAST ETHERNET TRANSCEIVER RTL8208

1. Features 2
2. General Description 2
3. Block Diagram 3
4. Pin Assignments 4
5. Pin Description 6
5.1 Media Connection Pins 6
5.2 Power and Ground Pins 6
5.3 Miscellaneous Pins 7
5.4 RMII/SMII/SS-SMII Pins 8
5.5 SMI (Serial Management Interface) Pins 9
5.6 LED Pins 9
5.7 Mode Control Pins 10
5.8 Reserved Pins 11
6. Register Descriptions 12
6.1 Register0: Control 12
6.2 Register1: Status 14
6.3 Register2: PHY Identifier 1 Register 15
6.4 Register3: PHY Identifier 2 Register 15
6.5 Register4: Auto-Negotiation Advertisement 16
6.6 Register5: Auto-Negotiation Link Partner Ability 17
6.7 Register6: Auto-Negotiation Expansion 18
7. Functional Description 19
7.1 General 19
7.1.1 SMI (Serial Management Interface) 19
7.1.2 Port Pair Loop Back Mode (PP-LPBK) 19
7.1.3 PHY Address 20
7.1.4 Auto-Negotiation 20
7.1.5 Full-Duplex Flow Control 20
7.2 Initialization and Setup 20
7.2.1 Reset 20
7.2.2 Setup and configuration 20
7.3 10Base-T 20
7.3.1 Transmit Function 20
7.3.2 Receive Function 21
7.3.3 Link Monitor 21
7.3.4 Jabber 21
7.3.5 Loopback 21
7.4 100Base-TX 21
7.4.1 Transmit Function 21
7.4.2 Receive Function 21
7.4.3 Link Monitor 22
7.4.4 Baseline Wander Compensation 23
7.5 100Base-FX 23
7.5.1 Transmit Function 23
7.5.2 Receive Function 23
7.5.3 Link Monitor 24
7.5.4 Far-End-Fault-Indication (FEFI) 24
7.5.5 Reduced Fiber Interface 24
7.6 RMII/SMII/SS-SMII 24
7.6.1 RMII (Reduced MII) 25
7.6.2 SMII (Serial MII) 25
7.5.3 SS-SMII (Source Synchronous -Serial MII) 27
7.7 Power Saving and Power Down Mode 28
7.7.1 Power Saving Mode 28
7.7.2 Power Down Mode 28
7.8 LED Configuration 28
7.8.1 LED Blinking Time 28
7.8.2 Serial Stream Order 29
7.8.3 Bi-Color LED 30
7.9 Crossover Detection and Auto Correction 30
7.10 Polarity Detection and Auto Correction 31
7.11 2.5V Power Generation 31
8. Design and Layout Guide 32
8.1 General Guidelines 32
8.2 Differential Signal Layout Guidelines 32
8.3 Clock Circuit 32
8.4 2.5V power 32
8.5 Power Planes 32
8.6 Ground Planes 32
8.7 Transformer Options 32
9. Application information 33
9.1 10Base-T/100Base-TX Application 33
9.2 100Base-FX Application 34
10. Electrical Characteristics 35
10.1 Absolute Maximum Ratings 35
10.2 Operating Range 35
10.3 DC Characteristics 35
10.4 AC Characteristics 36
10.5 Digital Timing Characteristics 37
10.6 Thermal Data 38
11. Mechanical Dimensions 39

1. Features

- Supports 8-port integrated physical layer and transceiver for 10Base-T and 100Base-TX
- Up to 8 ports support of 100Base-FX
- Reduced 100Base-FX interface **(patented)**
- Robust baseline wander correction for improved 100BASE-TX performance
- Fully compliant with IEEE 802.3/802.3u
- IEEE 802.3u compliant Auto-negotiation for 10/100 Mbps control
- Hardware controlled Flow control advertisement ability
- Supports RMII/SMII/SS-SMII interfaces
- Multiple driving capabilities of RMII/SMII/SS-SMII
- Supports 25MHz crystal as clock source for RMII with 50MHz REFCLK output for MAC
- Very low power consumption
- Supports port-pair loop mode (PP-LPBK mode)
- Supports two Power reduction methods:
  1. Power saving mode (cable detection)
  2. Power down mode
- Power-on auto reset function eliminates the need for external reset circuits
- Crossover detection and auto correction.
- Flexible LED display modes through 2-wire serial LED control interface
- 128-pin PQFP
- 2.5V/3.3V power supply
- 0.25µm, CMOS technology

2. General Description

The RTL8208 is a highly integrated 8 port, 10Base-T/100Base-TX/FX, Ethernet transceiver implemented in 0.25µm CMOS technology. It is currently the world's smallest Octal-PHY chip package with many special patented features. Traditional SD pins in 100Base-FX are omitted by Realtek patent to obtain fewer pin-count. Flexible hardware settings are provided to configure the various operating modes of the chip. The RTL8208 consists of 8 separate and independent channels. Each channel consists of an RMII/SMII/SS-SMII interface to MAC controller, and hardware pins are used to configure the interface for RMII, or SMII, or SS-SMII mode. In RMII mode, another hardware pin is used to set port-pair loop mode (PP-LPBK mode), which can extend physical transmission length or perform physical media transport operations without any switch controller. In addition, the RTL8208 features very low power consumption, as low as 1.8 W (max.). Additionally, pin-outs are designed to provide optimized direct routing can be implemented, which simplifies the layout work and reduces EMI noise issues.

3. Block Diagram

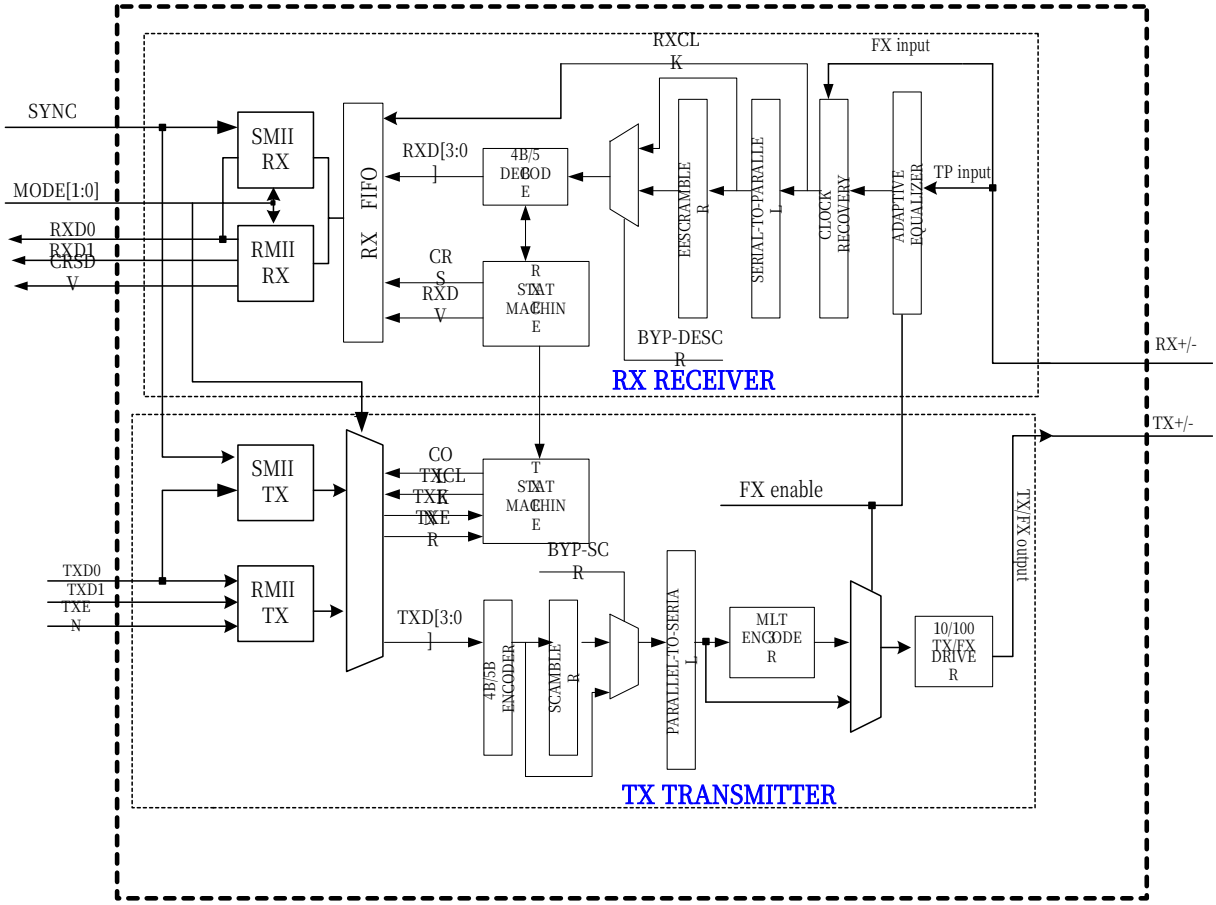

4. Pin Assignments

'I' stands for input; 'O' stands for output; 'A' stands for analog; 'D' stands for digital

Pin Name	Pin#	Type	Pin Name	Pin#	Type
VSSA	1	AGND	RXD1[5]/LED_BLNK_TIME	65	I/O
RXIP[1]	2	AI	RXD0[5]	66	O
RXIN[1]	3	AI	CRS_DV[5]/TP_PAUSE	67	I/O
VDDAL	4	AVDD	TXD1[5]	68	I
VDDAL	5	AVDD	TXD0[5]	69	I
RXIN[2]	6	AI	TX_EN[5]	70	I
RXIP[2]	7	AI	VDD	71	DVDD
VSSA	8	AGND	VSS	72	DGND
TXOP[2]	9	AO	RXD1[4]/PHY_ADDR[4]	73	I/O
TXON[2]	10	AO	RXD0[4]	74	O
VDDAH	11	AVDD	CRS_DV[4]/RX_CLK	75	O
VDDAH	12	AVDD	TXD1[4]	76	I
TXON[3]	13	AO	TXD0[4]	77	I
TXOP[3]	14	AO	TX_EN[4]/TX_CLK	78	I
VSSA	15	AGND	VDD	79	DVDD
RXIP[3]	16	AI	SYNC/TX_SYNC	80	I
RXIN[3]	17	AI	RX_SYNC/RPT_MODE	81	I/O
VDDAL	18	AVDD	VSS	82	DGND
VDDAL	19	AVDD	RXD1[3]/PHY_ADDR[3]	83	I/O
RXIN[4]	20	AI	RXD0[3]	84	O
RXIP[4]	21	AI	CRS_DV[3]/FX_PAUSE	85	I/O
VSSA	22	AGND	TXD1[3]	86	I
TXOP[4]	23	AO	TXD0[3]	87	I
TXON[4]	24	AO	TX_EN[3]	88	I
VDDAH	25	AVDD	VDD	89	DVDD
VDDAH	26	AVDD	VSS	90	DGND
TXON[5]	27	AO	RXD1[2]/TEST	91	I/O
TXOP[5]	28	AO	RXD0[2]	92	O
VSSA	29	AGND	CRS_DV[2]/FX_DUPLEX	93	I/O
RXIP[5]	30	AI	TXD1[2]	94	I
RXIN[5]	31	AI	TXD0[2]	95	I
VDDAL	32	AVDD	TX_EN[2]	96	I
VDDAL	33	AVDD	RXD1[1]	97	O
RXIN[6]	34	AI	RXD0[1]	98	O
RXIP[6]	35	AI	CRS_DV[1]/SEL_TXFX[1]	99	I/O
VSSA	36	AGND	TXD1[1]	100	I
TXOP[6]	37	AO	TXD0[1]	101	I
TXON[6]	38	AO	TX_EN[1]	102	I
VDDAH	39	AVDD	VDD	103	DVDD
VDDAH	40	AVDD	VSS	104	DGND
TXON[7]	41	AO	RXD1[0]	105	O
TXOP[7]	42	AO	RXD0[0]	106	O
VSSA	43	AGND	CRS_DV[0]/SEL_TXFX[0]	107	I/O
RXIP[7]	44	AI	TXD1[0]	108	I
RXIN[7]	45	AI	TXD0[0]	109	I
VDDAL	46	AVDD	TX_EN[0]	110	I
RESET#	47	I	VSS	111	DGND
REFCLK	48	I/O	MDIO	112	I/O
LED_DATA/LEDMODE[1]	49	I/O	MDC	113	I
LED_CLK/LEDMODE[0]	50	I/O	X1	114	I
RXD1[7]/EN_AUTOXOVER	51	I/O	X2	115	O
RXD0[7]/DRIVE[0]	52	I/O	VCTRL	116	I/O
CRS_DV[7]/MODE[0]	53	I/O	VDDAH	117	AVDD
TXD1[7]	54	I	IBREF	118	AO
TXD0[7]	55	I	VDDAL	119	AVDD
TX_EN[7]	56	I	RXIN[0]	120	AI
VDD	57	DVDD	RXIP[0]	121	AI
VSS	58	DGND	VSSA	122	AGND
RXD1[6]/DISBLINK	59	I/O	TXOP[0]	123	AO
RXD0[6]/DRIVE[1]	60	I/O	TXON[0]	124	AO
CRS_DV[6]/MODE[1]	61	I/O	VDDAH	125	AVDD
TXD1[6]	62	I	VDDAH	126	AVDD
TXD0[6]	63	I	TXON[1]	127	AO
TX_EN[6]	64	I	TXOP[1]	128	AO

5. Pin Description

In order to reduce pin count, and therefore size and cost, some pins have multiple functions. In those cases, the functions are separated with a "/" symbol. Refer to the Pin Assignment diagram for a graphical representation.

'I' stands for input
'O' stands for output
'A' stands for analog signal
'D' stands for digital signal
'P' stands for power
'G' stands for ground
'Pu' stand for internal pull up (75K ohm)
'Pd' stand for internal pull down (75K ohm)

5.1 Media Connection Pins

Pin Name	Pin	Type	Description
RXIP[7:0]	44,35,30,21,16, 7,2,121	AI	**Receiver Input:** Differential positive signal shared by 100Base-TX, 100Base-FX, 10Base-T.
RXIN[7:0]	45,34,31,20,17, 6,3,120	AI	**Receiver Input:** Differential negative signal shared by 100Base-TX, 100Base-FX, 10Base-T.
TXOP[7:0]	42,37,28,23,14, 9,128,123	AO	**Transmitter Output:** Differential positive signal shared by 100Base-TX, 100Base-FX, 10Base-T.
TXON[7:0]	41,38,27,24, 13,10,127,124	AO	**Transmitter Output:** Differential negative signal shared by 100Base-TX, 100Base-FX, 10Base-T.

5.2 Power and Ground Pins

Pin Name	Pin	Type	Description
VDDAH	117	P	**Power for IBREF**
VDDAH	11,12,25,26,39, 40,125,126	P	**3.3V Power to analog:** Used for transmitters and equalizers.
VDDAL	119,4,5,18,19, 32,33,46	P	**2.5V Power to analog:** Used for PLL circuits.
VSSA	122,1,8,15,22, 29,36,43	G	**Analog ground**
VDD	57,71,79,89, 103	P	**Digital 2.5V power supply**
VSS	58,72,82,90, 104,111	G	**Digital ground**

5.3 Miscellaneous Pins

Pin Name	Pin	Type	Description
RESET#	47	I, (Pu)	**Reset:** This is an active low input. To complete the reset function, this pin must be asserted low for at least 10ms.
X1	114	I	**25MHz Crystal X1 or 25MHz Oscillator clock input:** When X1 is pulled low, X2 must be floating. REFCLK will then be the chip clock input.
X2	115	O	**25MHz Crystal X2**
REFCLK	48	I/O	**Reference clock:** If X1 is 25MHz active, REFCLK is a 50MHz output. If X1 is pulled-low (disabled), REFCLK is the clock input as below: 50MHz 100ppm clock input for RMII mode. 125MHz 100ppm clock input for SMII/SS-SMII mode.
IBREF	118	A	**Reference Bias Resistor:** This pin must be tied to analog ground through an external 1.96KΩ resistor when using a 1:1 transformer on Tx/Rx.
VCTRL	116	O	**Voltage control:** This pin controls a PNP transistor to generate the 2.5V power supply for VDD and VDDAL pins.

5.4 RMII/SMII/SS-SMII Pins

Pin Name	Pin	Type	Description
TXD0[7:0]	55,63,69,77, 87,95,101,109	I	**Transmit Data Input (bit 0):** In RMII, TXD0 and TXD1 are the di-bits input transmitted and driven synchronously to REFCLK from MAC. In SMII, TXD0 inputs the data that is transmitted and is driven synchronously to REFCLK. In 100Mbps, TXD0 inputs a new 10-bit segment starting with SYNC. In 10Mbps, TXD0 must repeat each 10-bit segment 10 times. In SS-SMII, TXD0 behaves as SMII except synchronous to TX_CLK instead of REFCLK and 10-bit segment starting with TX_SYNC instead of SYNC.
TXD1[7:0]	54,62,68,76, 86,94,100,108	I	**Transmit Data Input (bit 1):** In RMII, TXD1 and TXD0 are the input di-bits synchronously to REFCLK. In SMII/SS-SMII, TXD1 is not used and should be tied either high or low.
TX_EN [7:0]	56,64,70,78, 88,96,102,110	I	**Transmit Enable:** In RMII , TX_EN indicates the di-bits on TXD is valid and is synchronous to REFCLK. In SMII/SS-SMII, TX_EN[7:0] are not used.
RXD0[7:0]	52,60,66,74, 84,92,98,106	O	**Receive Data Input (bit 0):** In RMII, RXD0 and RXD1 output di-bits synchronously to REFCLK. In SMII, RXD0 outputs data or inband management information synchronously to REFCLK. In 100Mbps, RXD0 outputs a new 10-bit segment starting with SYNC. In 10Mbps, RXD0 must repeat each 10-bit segment 10 times. In SS-SMII, RXD0 behaves as SMII except synchronous to RX_CLK instead of REFCLK and 10-bit segment starting with RX_SYNC instead of SYNC.
RXD1[7:0]	51,59,65,73, 83,91,97,105	O	**Receive Data Input (bit 1):** In RMII, RXD1 and RXD0 output di-bits synchronously to REFCLK. In SMII/SS-SMII, RXD1is not used and they are driven low.
CRS_DV[7:0]	53,61,67,75, 85,93,99,107	O	**Carrier Sense and Data Valid:** In RMII, CRS_DV is asynchronous to REFCLK and asserts when the medium is non-idle. In SMII/SS-SMII, CRS_DV[7:0] are not used and driven low.
RX_CLK/ CRS_DV[4]	75	O	**Receive Clock:** In SS-SMII, CRS_DV[4] of RMII is used as RX_CLK, which is a 125MHz clock output.
RX_SYNC	81	I/O	**Receive Synchronous :** In SS-SMII, RX_SYNC is a sync signal used to delimit the 10-bit segment of RXD0 for all ports.
SYNC/ TX_SYNC	80	I	**Sync/Transmit Synchronous:** In SMII, SYNC is a sync signal used to delimit a 10-bit segment of RXD0 and TXD0 for all ports. In SS-SMII, TX_SYNC is a sync signal used to delimit the 10-bit segment of TXD0 for all ports.
TX_CLK/ TX_EN[4]	78	I	**Transmit Clock/Transmit Enable:** In SS-SMII, TX_EN[4] of RMII is used as TX_CLK, which is a 125MHz clock input from MAC.

5.5 SMI (Serial Management Interface) Pins

Pin Name	Pin	Type	Description
MDIO	112	I/O, (Pu)	**Management Data I/O.** Bi-directional data interface. A 1.5KΩ pull-up resistor is required (as specified in IEEE802.3u). The MAC controller access of the MII registers should be delayed at least 700us after completion of the reset because of the internal reset operation of the RTL8208
MDC	113	I, (Pd)	**Management Data Clock.** 0 to 25MHz clock sourced by MAC to sample MDIO. The MAC controller access of the MII registers should be delayed at least 700us after completion of the reset because of the internal reset operation of the RTL8208

5.6 LED Pins

Pin Name	Pin	Type	Description
LED_DATA/ LEDMODE[1]	49	I/O	LED_DATA outputs serial status bits that can be shifted into a shift register to be displayed via LEDs. LED_DATA is output synchronously to LED_CLK. This pin is latched upon reset as LEDMODE[1] LEDMODE[1:0] controls the forms of serial LED statuses. See LED operation mode section.
LED_CLK/ LEDMODE[0]	50	I/O	LED_CLK outputs the reference clock for the serial LED signals. This pin is latched upon reset as LEDMODE[0]

5.7 Mode Control Pins

Pin Name	Pin	Type	Description
SEL_TXFX[1:0]/ CRS_DV[1:0]	99,107	I/O, (Pd,Pd)	**Select 10/100BaseTX or 100BaseFX:** (default = 2'b00) If RPT_MODE = 0: 2'b00: All 8 ports (port0~port7) are 10Base-T/100Base-TX. 2'b01: Port 7 is 100FX, other ports are 10Base-T/100Base-TX. 2'b10: Ports 6 & 7 are 100FX, other ports are 10Base-T/100Base-TX. 2'b11: All 8 ports are 100Base-FX. If RPT_MODE =1: 2'b00: All 8 ports (port0~port7) are 10Base-T/100Base-TX. 2'b01: Port 7 and 5 are 100FX, others are 10Base-T/100Base-TX. 2'b10: Ports 1,3,5&7 are 100FX, others are 10Base-T/100Base-TX. 2'b11: All 8 ports are 100Base-FX.
PP-LPBK mode / RX_SYNC	81	I/O, (Pd)	**Port Pair Loop Back mode:** (default =0) Upon power-on reset, this pin is input to assert PP-LPBK mode. When set, all eight ports are port-pair looped back, acting like a signal regeneration/transformation repeater. Refer to the section covering PP-LPBK mode.
PHY_ADDR[4:3]/ RXD1[4:3]	73,83	I/O, (Pd,Pu)	**PHY Address:** (default = 2'b01) These 2bits determine the highest 2bits of 5-bit PHY address upon reset.
MODE[1:0]/ CRS_DV[6:7]	61,53	I/O, (Pu,Pu)	**Select RMII/SMII/SS-SMII mode:** (default = 2'b11) 2'b1x: RMII 2'b00: SMII 2'b01: SS-SMII
TP_PAUSE/ CRS_DV[5]	67	I/O, (Pu)	**Twisted Pair Pause capability:** (default =1) Sets the Flow control ability of Reg.4.10 for UTP ports upon power-on reset. 1: With flow control ability. 0: Without flow control ability
FX_PAUSE/ CRS_DV[3]	85	I/O, (Pu)	**100Base-FX Flow control capability:** (default =1) Forces the flow control capability of Reg.4.10 and Reg.5.10 upon power-on reset. 1: With flow control ability in 100Base-FX. 0: Without flow control ability in 100Base-FX.
FX_DUPLEX/ CRS_DV[2]	93	I/O, (Pu)	**FX_DUPLEX: Force 100Base-FX Full Duplex Mode:** (default =1) This pin sets 100Base-FX duplex and affects those ports in 100Base-FX mode. 1=full duplex, 0=half duplex. Upon reset, this pin sets the default values of Reg.0.8 of those ports in 100Base-FX.
EN_AUTOXOVER /RXD1[7]	51	I/O, (Pu)	**Enable Auto Crossover Detection:** (default =1) 1: Enable auto crossover detection 0: Disable auto crossover detection
DISBLINK/ RXD1[6]	59	I/O, (Pd)	**Disable power-on reset LEDs blinking:** (default = 0) 1=Disable power-on LED blinking 0=blink.
LED_BLNK_TIME/ RXD1[5]	65	I/O, (Pu)	**LED blink time:** (default =1) Used to control blinking speed of activity and collision LEDs. 1= 43ms 0= 120ms
LEDMODE[1:0]	49,50	I, (Pd,Pd)	**LEDMODE[1:0]:** (default = 00) Controls the forms of serial LED status. **LEDMODE** **Mode** **Output** **2'b00** 3-bit serial stream Col/Fulldup, Link/Act, Spd **2'b01** 2-bit serial stream Spd, Link/Act **2'b10** 3-bit for Bi-color LED Col/Fulldup, Link/Act, Spd See LED operation mode section for more information.

Pin Name	Pin	Type	Description
DRIVE[0]/ RXD0[7]	52	I/O, (Pd)	**DRIVE[0]:** Controls the output driving ability of SSMII RX_CLK. 1'b0: 12mA (default) 1'b1: 16mA
DRIVE[1]/ RXD0[6]	60	I/O, (Pd,Pd)	**DRIVE[1]**: Controls the output driving abilities of the RMII/SMII/SS-SMII signals other than RX_CLK. **Drive [1:0]** **Output driving ability** 2'b00 4mA (default) 2'b01 8mA 2'b10 12mA 2'b11 16mA

5.8 Reserved Pins

Pin Name	Pin	Type	Description
ENANAPAR/ RXD1[1]	97	I/O, (Pd)	**Reserved for internal use.** Must be kept floating.
TEST/ RXD1[2]	91	I/O, (Pd)	**TEST. Reserved for internal use.** Must be kept floating.
CPRST/ RXD1[0]	105	I/O, (Pd)	**Reserved for internal use.** Must be kept floating.

6. Register Descriptions

The first six registers of the MII are defined by the MII specification. Other registers are defined by Realtek Semiconductor Corp. for internal use and are reserved for specific uses.

Register	Description	Default
0	Control Register	3100
1	Status Register	0F49
2	PHY Identifier 1 Register	001C
3	PHY Identifier 2 Register	C883
4	Auto-Negotiation Advertisement Register	05E1
5	Auto-Negotiation Link Partner Ability Register	0001
6	Auto-Negotiation Expansion Register	0000

RO: Read Only
RW: Read/Write
LL: Latch Low until cleared
LH: Latch High until cleared
SC: Self Clearing

6.1 Register0: Control

Reg. bit	Name	Description	Mode	Default
0.15	Reset	1=PHY reset. This bit is self-clearing.	RW/SC	0
0.14	Loopback	This will loopback TXD to RXD and ignore all the activities on the cable media. Valid only for 10Base-T. 1=Enable loopback. 0=Normal operation.	RW	0
0.13	Spd_Sel	When Nway is enabled, this bit reflects the result of Auto-negotiation. (Read only) When Nway is disabled, this bit can be set by SMI*. (Read/Write) When 100FX is enabled, this bit =1 (Read only) 1=100Mbps. 0=10Mbps.	RW	1
0.12	Auto Negotiation Enable	This bit can be set through SMI.(Read/Write) When 100FX is enabled, this bit =0 (Read only) 1 = Enable Auto-negotiation process. 0 = disable Auto-negotiation process.	RW	1 or 0 for 100FX
0.11	Power Down	1=Power down. All functions will be disabled except SMI.read/write function. 0=Normal operation.	RW	0
0.10	Isolate	1 = Electrically isolate the PHY from RMII/SMII/SS-SMII. PHY is still able to respond to MDC/MDIO. 0 = Normal operation	RW	0
0.9	Restart Auto Negotiation	1=Restart Auto-Negotiation process. 0=Normal operation.	RW/SC	0
0.8	Duplex Mode	When Nway is enabled, this bit reflects the result of Auto-negotiation. (Read only) When Nway is disabled, this bit can be set by SMI*. (Read/Write) When 100FX is enabled, this bit is determined by the FX_DUPLEX pin. (Read/Write) 1=Full duplex operation. 0=Half duplex operation.	RW	1
0.[7:0]	Reserved			0

*SMI: Serial Management Interface , which is composed of MDC,MDIO, allows MAC to manage PHY.

Reset – In order to reset the RTL8208 by software control, a '1' must be written to bit 15 using an SMI write operation. The bit clears itself after the reset process is complete, and does not need to be cleared using a second SMI write. Writes to other Control register bits will have no effect until the reset process is completed, which requires approximately 1us. Writing a '0' to this bit has no effect. Because this bit is self clearing after a few cycles from a write operation, it will return a '0' when read.

Loopback – The RTL8208 may be placed into loopback mode by writing a '1' to bit 14. Loopback mode may be cleared either by writing a '0' to bit 14 or by resetting the chip. When this bit is read, it will return a '1' when the chip is in software-controlled loopback mode, otherwise it will return a '0'.

Speed Selection – If Auto-negotiation is enabled, this bit has no effect on the speed selection. However, if Auto-negotiation is disabled by software control, the operating speed of the RTL8208 can be forced by writing the appropriate value to bit 13. Writing a '1' to this bit forces 100Base-X operation, while writing a '0' forces 10Base-T operation. When this bit is read, it returns the value of the software controlled forced speed selection only.

Auto Negotiation Enable – Default Auto Negotiation enable for all TP ports and disable for FX ports. Auto-negotiation can be disabled by either software control to set 0.12=0.

Power Down – The RTL8208 supports a low power mode which is intended to decrease power consumption. Writing a '1' will enable power down mode, and writing a '0' will return the RTL8208 to normal operation. When read, this register will return a '1' when in power down mode, and a '0' during normal operation.

Isolate – Each individual PHY may be isolated from its MII by writing a '1' to bit 10. All MII outputs will be tri-stated and all MII inputs will be ignored. Since the MII management interface is still active, the isolate mode may be cleared either by writing a '0' to bit 10 or by resetting the chip. When this bit is read, it will return a '1' when the chip is in isolate mode, and a '0' during normal operation.

Restart Auto Negotiation – Bit 9 is a self-clearing bit that allows the Auto-negotiation process to be restarted, regardless of the current status of the Auto-negotiation state machine. In order for this bit to have an effect, Auto-negotiation must be enabled. Writing a '1' to this bit restarts Auto-negotiation while writing a '0' to this bit has no effect. When this bit is read, it will always return a '0'.

Duplex Mode – By default, the RTL8208 powers up in half duplex mode. The chip can be forced into full duplex mode by writing a '1' to bit 8 while Auto-negotiation is disabled. Half duplex mode can be resumed either by writing a '0' to bit 8 or by resetting the chip. When Nway is enabled, this bit reflects the results of the Auto-negotiation, and is in a read only mode. When Nway is disabled, this bit can be set through the SMI, and is in a read/write mode. When 100FX is enabled, this bit can be set through the SMI or FX_DUPLEX pin and is in a read/write mode.

Reserved Bits – All reserved MII register bits must be written as '0' at all times. Ignore the RTL8208 output when these bits are read.

6.2 Register1: Status

Reg. bit	Name	Description	Mode	Default
1.15	100Base_T4	0 = no 100Base-T4 capability.	RO	0
1.14	100Base_TX_FD	1=100Base-TX full duplex capable. 0=Not 100Base-TX full duplex capable.	RO	1
1.13	100Base_TX_HD	1=100Base-TX half duplex capable. 0=Not 100Base-TX half duplex capable.	RO	1
1.12	10Base_T_FD	1=10Base-TX full duplex capable. 0=Not 10Base-TX full duplex capable.	RO	1
1.11	10Base_T_HD	1=10Base-TX half duplex capable. 0=Not 10Base-TX half duplex capable.	RO	1
1.[10:7]	Reserved		RO	0
1.6	MF Preamble Suppression	The RTL8208 will accept management frames with preamble suppressed.	RO	1
1.5	Auto-negotiate Complete	1=Auto-negotiation process completed. Reg.4,5 are valid if this bit is set. 0=Auto-negotiation process not completed.	RO	0
1.4	Remote Fault	1=Remote fault indication from link partner has been detected. 0=No remote fault indication detected. When in 100FX mode, this bit means in-band signal Far-End-Fault is detected. Refer to FX MODE section.	RO/LH	0
1.3	Auto-Negotiation Ability	1=Nway Auto-negotiation capable. (permanently =1) 0=Without Nway Auto-negotiation capability.	RO	1
1.2	Link Status	1=Link has never failed since previous read. 0=Link has failed since previous read. If link fails, this bit will be set to 0 until bit is read.	RO/LL	0
1.1	Jabber Detect	1=Jabber detected. 0=No Jabber detected. The jabber function is disabled in 100Base-X mode. Jabber is supported only in 10Base-T mode.	RO/LH	0
1.0	Extended Capability	1=Extended register capable. (permanently =1) 0=Not extended register capable.	RO	1

100Base_T4 – The RTL8208 does not support the T4 function. Any reads to this bit will return a '0'.

100Base_TX_FD – The RTL8208 is capable of operating in 100Base-TX full duplex mode.

100Base_TX_HD – The RTL8208 is capable of operating in 100Base-TX half duplex mode.

10Base_T_FD – The RTL8208 is capable of operating in 10Base-T full duplex mode.

10Base_T_HD – The RTL8208 is capable of operating in 10Base-T half duplex mode.

Reserved – Ignore the output of the RTL8208 when these bits are read.

MF Preamble Suppression – Management Frame Preamble Suppression is permanently set in the RTL8208, allowing subsequent MII management frames to be accepted with or without the standard preamble pattern. Only two preamble bits are required between successive management commands, instead of the normal 32, however, a minimum of 32 preamble bits are required for the first SMI read/write transaction after reset. One idle bit is required between any two management transactions (as defined in IEEE802.3u spec). Reads of this bit will always return a '1'.

Auto-negotiate Complete – Bit 5 will return a '1' if the Auto-negotiation process has been completed and the contents of registers 4 and 5 are valid.

Remote Fault – When link partner detect far-end fault, it would send far-end indication stream pattern. When RTL8208 receive this pattern, set Reg1.4=1.

Auto-Negotiation Ability – The RTL8208 is capable of performing IEEE Auto-negotiation, and will return a '1' when bit 4 is read, regardless of whether or not the Auto-negotiation function has been disabled.

Link Status – The RTL8208 will return a '1' on bit 2 when the link state machine is in Link Pass, indicating that a valid link has been established. Otherwise, it will return '0'. When a link failure occurs after the link pass state has been entered, the Link

Status bit will be latched at '0' and will remain so until the bit is read. After the bit is read, it becomes '1' if the Link Pass state has been entered again.

Jabber Detect – The RTL8208 will return a '1' on bit 1 if a jabber condition has been detected. After the bit is read, or if the chip is reset, it reverts to '0'. This is for 10Base-T only. Jabber occurs when a predefined excessive long packet is detected for 10Base-T. When the duration of TX_EN exceeds the jabber timer (21ms), the transmit and loopback functions will be disabled and the COL LED starts blinking. After TX_EN goes low for more than 500 ms, the transmitter will be re-enabled and the COL LED stops blinking.

Extended Capability – The RTL8208 supports extended capability registers, and will return a '1' when bit 0 is read. Several extended registers have been implemented in the RTL8208.

6.3 Register2: PHY Identifier 1 Register

The PHY Identifier Registers #1 and #2 together form a unique identifier for the PHY section of this device. The Identifier consists of a concatenation of the Organizationally Unique Identifier (OUI), the vendor's model number and the model revision number. A PHY may return a value of zero in each of the 32 bits of the PHY Identifier if desired. The PHY Identifier is intended to support network management.

Reg. bit	Name	Description	Mode	Default
2.[15:0]	OUI	Composed of the 3rd to 18th bits of the Organizationally Unique Identifier (OUI), respectively.	RO	001C h

6.4 Register3: PHY Identifier 2 Register

Reg. bit	Name	Description	Mode	Default
3.[15:10]	OUI	Assigned to the 19th through 24th bits of the OUI.	RO	110010
3.[9:4]	Model Number	Manufacturer's model number 08.	RO	001000
3.[3:0]	Revision Number	Manufacturer's revision number 03.	RO	0011

6.5 Register4: Auto-Negotiation Advertisement

This register contains the advertisement abilities of this device as they will be transmitted to its Link Partner during Auto-negotiation.

Reg. bit	Name	Description	Mode	Default
4.15	Next Page	1=Next Page enabled. 0=Next Page disabled. (Permanently =0)	RO	0
4.14	Acknowledge	Permanently =0.	RO	0
4.13	Remote Fault	1=Advertises that RTL8208 has detected a remote fault. 0=No remote fault detected.	RW	0
4.[12:11]	Reserved		RO	0
4.10	Pause	1=Advertises that the RTL8208 has flow control capability. 0=Without flow control capability. In 100FX mode, this bit is set by 100FX_PAUSE upon reset. In 100/10TP mode, this bit is set by TP_PAUSE upon reset.	RW	Set by TP_PAUSE Or FX_PAUSE
4.9	100Base-T4	1 = 100Base-T4 capable. 0 = Not 100Base-T4 capable. (Permanently =0)	RO	0
4.8	100Base-TX-FD	1=100Base-TX full duplex capable. 0=Not 100Base-TX full duplex capable.	RW	1
4.7	100Base-TX	1=100Base-TX half duplex capable. 0=Not 100Base-TX half duplex capable.	RW	1
4.6	10Base-T-FD	1=10Base-TX full duplex capable. 0=Not 10Base-TX full duplex capable.	RW	1
4.5	10Base-T	1=10Base-TX half duplex capable. 0=Not 10Base-TX half duplex capable.	RW	1
4.[4:0]	Selector Field	[00001]=IEEE802.3	RO	00001

Next Page – The RTL8208 does not implement the Next Page function, so bit 15 will always return a ‘0’ when read.

Acknowledge – Because the Next Page function is not implemented, bit 14 will always return a ‘0’ when read.

Remote Fault – When RTL8208 can not receive valid signal , set Reg4.13=1. The RTL8208 advertises this information to inform link partner.

Reserved – Ignore the output of the RTL8208 when these bits are read.

Pause –Setting this bit indicates the availability of Flow Control capabilities when full duplex operation is in use. This bit is used by one MAC to communicate Pause Capability to its Link Partner and has no effect on PHY operation.

100Base-T4 – Because the RTL8208 does not support the T4 function, any reads to this bit will return a ‘0’.

100Base-TX-FD – This bit advertises the ability to the Link Partner that the RTL8208 can operate in 100Base-TX full duplex mode. Writing a ‘0’ to this bit will suppress the transmission of this ability to the Link Partner. Resetting the chip will restore the default value. The default value is ‘1’ and writing a ‘1’ will set this bit to ‘1’. Reading this bit will return the last written value or the default value if no write has been completed since the last reset.

100Base-TX – This bit advertises the ability to the Link Partner that the RTL8208 can operate in 100Base-TX half duplex mode. Writing a ‘0’ to this bit will suppress the transmission of this ability to the Link Partner. Resetting the chip will restore the default value. The default value is ‘1’ and writing a ‘1’ will set this bit to ‘1’. Reading this bit will return the last written value or the default value if no write has been completed since the last reset.

10Base-T-FD – This bit advertises the ability to the Link Partner that the RTL8208 can operate in 10Base-T full duplex mode. Writing a ‘0’ to this bit will suppress the transmission of this ability to the Link Partner. Resetting the chip will restore the default value. The default value is ‘1’ and writing a ‘1’ will set this bit to ‘1’. Reading this bit will return the last written value or the default value if no write has been completed since the last reset.

10Base-T – This bit advertises the ability to the Link Partner that the RTL8208 can operate in 10Base-T half duplex mode. Writing a ‘0’ to this bit will suppress the transmission of this ability to the Link Partner. Resetting the chip will restore the default value. The default value is ‘1’ and writing a ‘1’ will set this bit to ‘1’. Reading this bit will return the last written value or the default value if no write has been completed since the last reset.

Selector Field – Bits 4:0 contain a fixed value of 00001, indicating that the chip belongs to the 802.3 class of PHY transceivers.

6.6 Register5: Auto-Negotiation Link Partner Ability

This register contains the advertised abilities of the Link Partner as received during Auto-negotiation. The content changes after the successful Auto-negotiation.

Reg. bit	Name	Description	Mode	Default
5.15	Next Page	1=Link partner desires Next Page transfer. 0=Link partner does not desire Next Page transfer.	RO	0
5.14	Acknowledge	1=Link Partner acknowledges reception of FLP words. 0=No acknowledgement by Link Partner.	RO	0
5.13	Remote Fault	1=Remote Fault indicated by Link Partner. 0=No remote fault indicated by Link Partner.	RO	0
5.12-11	Reserved		RO	0
5.10	Pause	1=Flow control supported by Link Partner. 0=No flow control supported by Link Partner. When Nway is enabled, this bit reflects Link Partner ability. (read only) In 100FX mode, this bit is set by FX_PAUSE or SMI.	RW	0
5.9	100Base-T4	1=100Base-T4 supported by Link Partner. 0=100Base-T4 not supported by Link Partner.	RO	0
5.8	100Base-TX-FD	1=100Base-TX full duplex supported by Link Partner. 0=100Base-TX full duplex not supported by Link Partner. For 100FX mode, this bit is set when Reg.0.8=1 or FX_DUPLEX =1. When Nway is disabled, this bit is set when Reg.0.13=1 and Reg.0.8=1.	RO	0
5.7	100Base-TX	1=100Base-TX half duplex supported by Link Partner. 0=100Base-TX half duplex not supported by Link Partner. For 100FX mode, this bit is set when Reg.0.8=0 or FX_DUPLEX =0. When Nway is disabled, this bit is set when Reg.0.13=1 and Reg.0.8=0.	RO	0
5.6	10Base-T-FD	1=10Base-TX full duplex supported by Link Partner. 0=10Base-TX full duplex not supported by Link Partner. When Nway is disabled, this bit is set when Reg.0.13=0 and Reg.0.8=1.	RO	0
5.5	10Base-T	1=10Base-TX half duplex supported by Link Partner. 0=10Base-TX half duplex not supported by Link Partner. When Nway disabled, this bit is set when Reg.0.13=0,and Reg.0.8=0.	RO	0
5.[4:0]	Selector Field	[00001]=IEEE802.3	RO	00001

Note that the values are only guaranteed to be valid once Auto-negotiation has successfully completed, as indicated by bit 5 of the MII Status Register.

Next Page – Bit 15 returns a value of '1' when the Link Partner implements the Next Page function and has Next Page information that it wants to transmit. However, since the RTL8208 does not implement the Next Page function, it ignores the Next Page bit, except to copy it to this register.

Acknowledge – Bit 14 is used by Auto-negotiation to indicate that a device has successfully received its Link Partner's Link Code Word.

Remote Fault – Bit 13 returns a value of '1' when the Link Partner signals that it has detected a remote fault. The RTL8208 advertises this information, but does not act upon it.

Reserved – Ignore the output of the RTL8208 when these bits are read.

Pause – Indicates that the Link Partner pause bit is set.

100Base-T4 – Though the RTL8208 does not support the T4 function, this bit reflects this ability of the Link Partner.

100Base-TX-FD – This bit indicates that the Link Partner can support 100Base-TX full duplex mode. This bit is cleared any time Auto-negotiation is restarted or the RTL8208 is reset.

100Base-TX – This bit indicates that the Link Partner can support 100Base-TX half duplex mode. This bit is cleared any time

Auto-negotiation is restarted or the RTL8208 is reset.

10Base-T-FD – This bit indicates that the Link Partner can support 10Base-T full duplex mode. This bit is cleared any time Auto-negotiation is restarted or the RTL8208 is reset.

10Base-T – This bit indicates that the Link Partner can support 10Base-T half duplex mode. This bit is cleared any time Auto-negotiation is restarted or the RTL8208 is reset.

Selector Field – Bits 4:0 reflect the value of the Link Partner's selector field. These bits are cleared any time Auto-negotiation is restarted or the chip is reset, and generally reflect the value of 0001, indicating that the Link Partner is an 802.3 device.

6.7 Register6: Auto-Negotiation Expansion

Reg. bit	Name	Description	Mode	Default
6.[15:5]	Reserved		RO	0
6.4	Parallel Detection Fault	1=A fault has been detected via the Parallel Detection function. 0=No fault has been detected via the Parallel Detection function.	RO	0
6.3	Link Partner Next Page Able	1= Link Partner is Next Page able. 0= Link Partner is not Next Page able.	RO	0
6.2	Local Next Page Able	1= RTL8208 is Next Page able. 0= RTL8208 is not Next Page able. (permanently=0)	RO	0
6.1	Page Received	1= A New Page has been received. 0= A New Page has not been received.	RO/LH	0
6.0	Link Partner Auto-Negotiation Able	If Auto- Negotiation is enabled, this bit means: 1= Link Partner is Auto-Negotiation able. 0= Link Partner is not Auto-Negotiation able. In 100FX or Nway disabled, this bit always =1.	RO	0 (Auto-Negotiation) or 1 (100FX)

Reserved – Ignore the output of the RTL8208 when these bits are read.

Parallel Detection Fault – Bit 4 is a read-only bit that gets latched high when a parallel detection fault occurs in the Auto-negotiation state machine. For further details, please consult the IEEE standard. The bit is reset to '0' after the register is read, or when the chip is reset.

Link Partner Next Page Able – Bit 3 returns a '1' when the Link Partner has Next Page capabilities. It has the same value as bit 15 of the Link Partner Ability Register.

Local Next Page Able – The RTL8208 does not have Next Page capabilities, so it will always return a '0' when bit 2 is read.

Page Received – Bit 1 is latched high when a new link code word is received from the Link Partner, checked and acknowledged. This bit is cleared when the link is lost or the chip is reset.

Link Partner Auto-Negotiation Able – Bit 0 returns a '1' when the Link Partner is known to have Auto-negotiation capabilities. Before any Auto-negotiation information is exchanged, or if the Link Partner does not comply with IEEE Auto-negotiation, the bit returns a value of '0'.

7. Functional Description

7.1 General

7.1.1 SMI (Serial Management Interface)

SMI (Serial Management Interface) is also known as MII Management Interface, which consists of two signals, MDIO and MDC; allowing the MAC controller to control and monitor the state of the PHY. MDC is a clock input for PHY to latch MDIO on its rising edge. The clock can run from DC to 25MHz. MDIO is a bi-directional connection used to write data to, or read data from PHY. The PHY address base is set by pins PHY_ADDR[4:3] and eight ports addresses of RTL8208 are internally 000,001,010,011,100,101,110,and 111.

SMI Read/Write Cycles								
	Preamble (32 bits)	Start (2 bits)	OP Code (2 bits)	PHYAD (5 bits)	REGAD (5 bits)	TurnAround (2 bits)	Data (16 bits)	Idle
Read	1……..1	01	10	AAAAA	RRRRR	Z0	D…….D	Z*
Write	1……..1	01	01	AAAAA	RRRRR	10	D…….D	Z*

*Z: high-impedance. During idle time, MDIO state is determined by an external 1.5KΩ pull-up resistor.

The RTL8208 supports Preamble Suppression, which allows the MAC to issue Read/Write Cycles without preamble bits (but needs at least one Idle for every cycle). However, for the first MII management cycle after power-on reset, a 32-bit preamble is needed. To guarantee the first successful SMI transaction after power-on reset, the MAC should be delayed at least 700us to issue the first SMI Read/Write Cycle relative to the rising edge of reset.

7.1.2 Port Pair Loop Back Mode (PP-LPBK)

PP-LPBK mode is enabled by pulling pin 81 high on reset. When in PP-LPBK mode, the ports of the RTL8208 is configured as four pairs, port0 & port1, port2 & port3, port4 & port5, and port 6 & port7. Each pair are set as RMII interface loop back, acting like a signal regeneration /transformation repeater, so a switch controller is not necessary.

In PP-LPBK mode, TP port and FX port selection is different from that in normal mode. The TP and FX port selection configuration is as follows:

For this table, “U” means UTP port, “F” means Fiber port.

PP-LPBK mode (Pin 81)	**SEL_TXFX[1:0] (Pin 99,107)**	**Port0, Port1**	**Port2, Port3**	**Port4, Port5**	**Port6, Port7**
0 (normal mode)	0 0	U U	U U	U U	U U
	0 1	U U	U U	U U	U F
	1 0	U U	U U	U U	F F
	1 1	F F	F F	F F	F F
1 (PP-LPBK)	0 0	U U	U U	U U	U U
	0 1	U U	U U	U F	U F
	1 0	U F	U F	U F	U F
	1 1	F F	F F	F F	F F

Since this configuration is a loop back mode, it uses Full duplex only, and Half duplex is not supported. The loop-back-pair ports should be configured as the same Speed. Although this mode does not effect normal N-Way mode, in order to keep in the same speed for each pair’s two ports, there is an auto-detection scheme. This scheme specifies that if one port of the pair is already linked, when the other port is linked later, the earlier link-on port will re-start Auto-negotiation, trying to keep the two ports linked at the same speed. When PP-LPBK mode is set, there are three requirements: It must be based upon RMII mode; no switch controller is connected; and TX_EN[7:0] is pulled down.

7.1.3 PHY Address

Each transceiver in the RTL8208 will have a unique PHY address for MII management. The address will be set through the PHY address pins. The pins are latched at the trailing end of a reset. Transceiver 1 will have the address AA000, where AA=PHYAD [4:3]. Each internal PHY address is AA000, AA001, AA010, AA011, AA100, AA101, AA110, AA111. Every time an SMI write or read operation is executed, the transceiver compares the PHY address with its own PHY address definition, and the operation is executed only when the addresses match.

7.1.4 Auto-Negotiation

For 100/10 TP port, the RTL8208 default setup is Auto-Negotiation enabled. Setting Register 0.12=0 by an SMI write can disable Auto-Negotiation. For a 100FX port, Auto-Negotiation is always disabled.

For an Auto-Negotiation enabled port, the RTL8208 will negotiate with its link partner to determine the speed and duplex status. The RTL8208's ability is advertised in Register 4, and , after Auto-Negotiation is finished, the link partner's ability will be stored in Register 5.

If the link partner is Auto-Negotiation disabled, the RTL8208 enters a parallel-detection state to identify the speed of the link partner. The RTL8208 will link in the same speed as link partner, but in half duplex mode.

Auto-Negotiation is also used to determine Full-duplex flow control. flow control ability is advertised in Register 4.10. The link partner's flow control ability is stored in Register 5.10. See the following section for more information.

7.1.5 Full-Duplex Flow Control

If hardware pin TP_pause or 100FX_pause are enabled at power-on reset, Register 5.10=1 and Register 4.10=1. Therefore, after reset is completed:

When Auto-Negotiation is enabled, Register 4.10 may be overwritten by the MAC, and Register 5.10 may be updated after N-Way has completed and, Register 5.10 is set as read only for the MAC.

When Auto-Negotiation is disabled, Register 5.10 is set to R/W for the MAC through the SMI interface. If the SMI does not write to Register 5.10, it is still Register 5.10=1, which means hardware forced flow control is enabled.

7.2 Initialization and Setup

7.2.1 Reset

The RTL8208 is initialized while in a reset state. During reset, each transceiver will be reset simultaneously. There are 3 ways to reset the RTL8208: Power-on auto reset; hardware pin reset; and software reset. The internal power-on auto reset circuit can reset the chip while the reset pin (pin47) is floating. The hardware reset signal must be asserted to pin 47, RESET#, low for at least 100ms. A software reset is implemented by writing Register 0.15=1, which is self clearing.

7.2.2 Setup and configuration

The operational modes of the RTL8208 can be configured either by hardware pin (pulled high or low) upon reset or by software programming via accessing the RTL8208 registers through the SMI. Refer to the pin and register description sections.

7.3 10Base-T

7.3.1 Transmit Function

When TX_EN is active, TXD from RMII/SMII/SS-SMII is serialized, Manchester-encoded, and driven into the network medium as a packet stream. An on-chip filtering and wave shaping circuit eliminates the need for external filtering. The transmit function is disabled when the link has failed or when Auto-negotiation proceeds.

7.3.2 Receive Function

The Manchester decoder converts the incoming serial stream when the circuit detects the signal , and the digital serial stream is then converted to 2-bit (RMII) or 1-bit (SMII/SS-SMII) data format. The preamble of the incoming stream is stripped off and regenerated. SFD is generated into RXD once the incoming SFD is detected and data bits entering the elastic buffer are over threshold.

7.3.3 Link Monitor

The 10Base-T link pulse detection circuit constantly monitors the RXIP/RXIN pins for the presence of valid link pulses. Auto-polarity is implemented for correcting the detected reverse polarity of the RXIP/RXIN signal pairs.

7.3.4 Jabber

Jabber occurs when TX_EN is asserted over 21ms. Both transmit and loopback functions are disabled once jabber occurs. The MII Register 1.1 (Jabber detect) bit is set high until jabber disappears and the bit is read again. The Jabber function is supported in 10-Base-T only, and is not implemented in 100Base-TX. The collision LED of the corresponding port will blink while Jabber occurs. Jabber is dismissed after TX_EN remains low for at least 500ms.

7.3.5 Loopback

Loopback mode can be achieved by writing to Register 0.14=1. Loopback mode routes transmitted data at the output of NRZ to the NRZI conversion module, back to the receiving path. This mode is used to check all the device's connection at the 5-bit symbol bus, and verify the operation of the phase locked loop.

7.4 100Base-TX

An internal 125MHz clock is generated by an on-chip PLL circuit to synchronize the transmit data or generate the clock signal for the incoming data stream.

7.4.1 Transmit Function

Upon detection of TX_EN high, the RTL8208 converts RMII/SMII/SS-SMII TXD to 5 bit code-group and substitutes J/K code-groups for the first 2 code-groups, which are called Start of Stream Delimiter (SSD). 4B5B coding continues for all of the data as long as TX_EN is asserted high. At the end of TX_EN, T/R code-groups are appended to the last data field, which will be stripped off at the remote receiving side. During the inter-packet gap, where TX_EN deasserted, IDLE code-groups are transmitted for the sake of clocking of the remote receiver. The 5-bit serial data stream after 4B5B coding is then scrambled as defined by the TP-PMD Stream Cipher function to flatten the power spectrum energy such that EMI effects can be significantly reduced.

This multi-level signaling technology moves the power spectrum energy from high frequency to low frequency, which also benefits EMI emission. Scrambling is not implemented in 100Base-FX.

7.4.2 Receive Function

The receive path includes a receiver composed of an adaptive equalizer and DC restoration circuits. These circuits compensate for incoming distortion of the MLT-3 signal. An MLT-3 to NRZI, and NRZI to NRZ converter is used to convert analog signals to digital bit-streams. A PLL circuit is also included to clock data bits exactly with minimum bit error rate. De-scrambler, 5B/4B decoder and serial-to-parallel conversion circuits follow. CRS_DV is asserted no later than when the SSD (Start-of-Stream-Delimiter) is detected within a few bits time (delay due to the elastic buffer as mentioned in the RMII section), and ends toggling once the data in the elastic buffer has been dumped to RXD.

Name	4B Code	5B Code	Definition
0	0000	11110	Data 0
1	0001	01001	Data 1
2	0010	10100	Data 2
3	0011	10101	Data 3
4	0100	01010	Data 4
5	0101	01011	Data 5
6	0110	01110	Data 6
7	0111	01111	Data 7
8	1000	10010	Data 8
9	1001	10011	Data 9
A	1010	10110	Data A
B	1011	10111	Data B
C	1100	11010	Data C
D	1101	11011	Data D
E	1110	11100	Data E
F	1111	11101	Data F
I	0000*	11111	Idle
J	0101*	11000	Start of stream Delimiter, Part 1
K	0101*	10001	Start of stream Delimiter, Part 2
T	0000*	01101	End of stream Delimiter, Part 1
R	0000*	00111	End of stream Delimiter, Part 2
H	1000	00100	Transmit Error (used to force signaling errors)
V	0111	00000	Invalid code
V	0111	00001	Invalid code
V	0111	00010	Invalid code
V	0111	00011	Invalid code
V	0111	00101	Invalid code
V	0111	00110	Invalid code
V	0111	01000	Invalid code
V	0111	01100	Invalid code
V	0111	10000	Invalid code
V	0111	11001	Invalid code

**Treated as an invalid code (mapped to 0111) when received in data field.*

4B5B Encoding

7.4.3 Link Monitor

In 100Base-TX mode, receive signal energy is detected by monitoring the receive pair for transitions in the signal level. Signal levels are qualified using squelch detect circuits. When no signal or valid signals are detected on the receive pair, the link monitor will enter and remain in the “Link Fail” state where only idle codes will be transmitted. When a valid signal is detected on the receive pair for a minimum period of time, the link monitor will enter the “Link Pass” state and the transmit and receive functions will be enabled.

7.4.4 Baseline Wander Compensation

The RTL8208 is ANSI TP-PMD compliant and supports input and Base Line Wander (BLW) compensation in 100Base-TX mode. The RTL8208 does not require external attenuation circuitry at its receive inputs, RXIP/RXIN. It accepts TP-PMD compliant waveforms directly, requiring only a 100Ω termination and a 1:1 transformer.

BLW is the change in the average DC content, over time, of an AC coupled digital transmission over a given transmission medium. BLW is a result from the interaction between the low frequency components of a transmitted bit stream and the frequency response of the AC coupling component(s) within the transmission system. If the low frequency content of the digital bit stream goes below the low frequency pole of the AC coupling transformers, then the droop characteristics of the transformers will dominate resulting in potentially serious BLW. If BLW is not compensated for, packet loss will occur.

7.5 100Base-FX

The RTL8208 can be configured into 100Base-FX mode through SEL_TXFX[1:0] (RPT_MODE should be 0). According to the setting of SEL_TXFX[1:0], port 7 or port 6/7 or all eight ports can be configured to 100Base-FX operation.

RPT_MODE=0	Medium type							
SEL_TXFX[1:0]	Port 0	Port 1	Port2	Port3	Port4	Port5	Port6	Port7
2'b00	UTP	UTP	UTP	UTP	UTP	UTP	UTP	UTP
2'b01	UTP	UTP	UTP	UTP	UTP	UTP	UTP	FX
2'b10	UTP	UTP	UTP	UTP	UTP	UTP	FX	FX
2'b11	FX	FX	FX	FX	FX	FX	FX	FX

UTP: 10Base-T/100Base-TX,
FX: 100Base-FX.

Compared to common 100Base-FX applications, the RTL8208 lacks a pair of differential SD (signal detect) signals to achieve its link monitoring function (patent), which significantly reduces the pin count in this octal PHY.

Any of the RTL8208 transceivers may interface with an external 100Base-FX fiber optic device and receiver instead of the magnetics module used with twisted pair cable. The differential transmit and receive data pairs will operate at PECL voltage levels instead of those required for twisted-pair transmission. The data will be encoded using two-level NRZI instead of three-level MLT3. The data stream is not scrambled for fiber-optic transmission.

7.5.1 Transmit Function

In 100Base-FX transmission, TXD is processed as 100Base-TX, except without scrambling, before the NRZI stage. Instead of converting to MLT-3 signals, as in 100Base-TX, the serial data stream is driven out as NRZI PECL signals, which enter the fiber transceiver in differential-pairs form. The fiber transceiver should be available working in a 3.3V environment. Refer to the fiber application section for more information.

PECL DC characteristics

Parameter	Symbol	Min	Max	Unit
PECL Input High Voltage	Vih	Vdd-1.16	Vdd-0.88	V
PECL Input Low Voltage	Vil	Vdd-1.81	Vdd-1.47	V
PECL Output High Voltage	Voh	Vdd-1.02		V
PECL Output Low Voltage	Vol		Vdd-1.62	V

7.5.2 Receive Function

Signals are received through PECL receiver inputs from the fiber transceiver, and directly passed to the clock recovery circuit for data/clock recovery. The scrambler/descrambler is bypassed in 100Base-FX mode.

7.5.3 Link Monitor

In 100Base-FX mode, if the RTL8208 receive path detects a valid link word, it enters the link state. If no valid link word is detected, it is in a link down state. Therefore, SD+/- is not necessary. The RTL8208 uses a reduced 100Base-FX interface.

7.5.4 Far-End-Fault-Indication (FEFI)

The MII Register 1.4 (Remote Fault indication detected) is a FEFI bit when 100FX is enabled, which indicates FEFI has been detected. FEFI is an alternative in-band signaling method which is composed of 84 consecutive '1' followed by one '0'. From the point of view of the RTL8208, once this pattern is detected 3 times, Register 1.4 is set, which means the transmit path (Remote side's receive path) has some problems.

On the other hand, if the RTL8208 detects no valid link pulse on RxOP/N pair, it sends out a FEFI stream pattern, which in turn will cause the remote side to detect a Far-End-Fault indication. This means the RTL8208 sees problems on the receive path.

The FEFI mechanism is used only in 100Base-FX applications.

7.5.5 Reduced Fiber Interface

The.RTL8208 ignores the underlying SD signal of the fiber transceiver to complete link detection and connection. This is achieved by monitoring RD signals from the fiber transceiver and checking if any link integrity events are met. This significantly reduces pin-count, especially for high-port PHY devices. This is a Realtek patent-pending technology and available only with Realtek product solutions.

7.6 RMII/SMII/SS-SMII

The interface to the MAC can be RMII, SMII, or SS-SMII through MODE[1:0]. When floating MODE[1:0] upon power-on reset, the RTL8208 operates in RMII mode (default).

MODE[1:0]	Operation Mode	REFCLK Clock input
2'b1x	RMII	50MHz, 100ppm
2'b00	SMII	125MHz, 100ppm
2'b01	SS-SMII	125MHz, 100ppm

Below illustrates the signals required for each interface:

RMII	SMII	SS-SMII
REFCLK	REFCLK	REFCLK
	SYNC	TX_SYNC
		RX_SYNC
CRS_DV[3:0]		
CRS_DV[4]		RX_CLK
CRS_DV[7:5]		
RXD0[7:0]	RXD0[7:0]	RXD0[7:0]
RXD1[7:0]		
TX_EN[3:0]		
TX_EN[4]		TX_CLK
TX_EN[7:5]		
TXD0[7:0]	TXD0[7:0]	TXD0[7:0]
TXD1[7:0]		

7.6.1 RMII (Reduced MII)

The RTL8208 meets all of the RMII requirements outlined in the RMII Consortium specifications. The main advantage introduced by RMII is pin count reduction; e.g., it operates with only one 50Mhz reference clock for both the TX and RX sides without separate clocks needed for both paths, as with the MII interface. However, some hardware modification is needed for this change, the most important and outstanding of which is the presence of an elastic buffer for absorption of the frequency difference between the 50MHz reference clock and the clocking information of the incoming data stream. Another change implemented is that the MII RXDV and Carrier_Sense are merged into one signal, CRS_DV, which is asserted high while detecting incoming packet data. When internal Carrier_Sense de-asserted, CRS_DV is de-asserted when the first di-bit of a nibble is presented onto RXD[1:0] synchronously to REFCLK. If there is still data in the FIFO that has not yet been presented onto RXD[1:0], then on the second di-bit of a nibble CRS_DV reasserts. This pattern of assertion and de-assertion continues until all received data in the FIFO has been presented onto RXD[1:0]

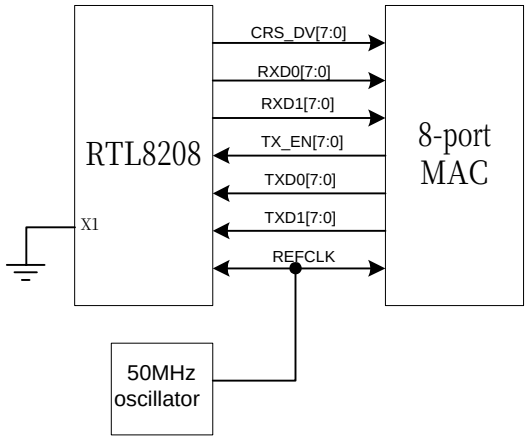

RMII Signal Diagram
50MHz Oscillator Solution

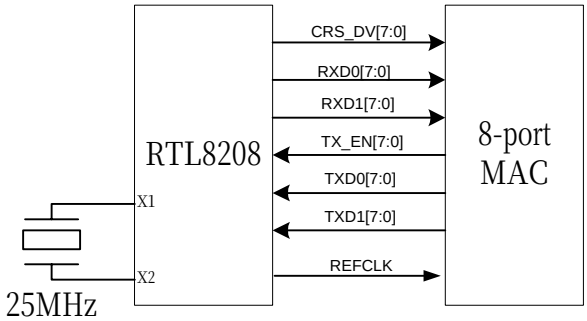

RMII Signal Diagram
25MHz Crystal Solution

7.6.2 SMII (Serial MII)

The RTL8208 also supports SMII interface to MAC, which allows a further reduction in the number of signals. As illustrated below, both the MAC and RTL8208 are synchronous to a 125MHz reference clock.

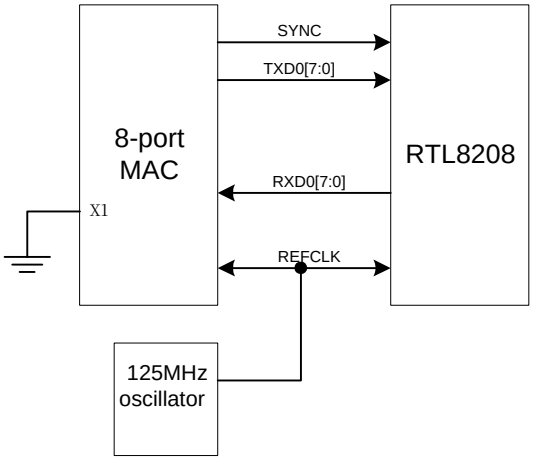

SMII Signal Diagram

Receive Path

Receive data and control information are signaled in 10-bit segments. SYNC signal is used to delimit the 10-bit segments. MAC is responsible to generate these SYNC pulses every ten clocks. For 100Mbps mode, each segment represents a byte of data. However, for 10Mbps mode, each segment is repeated ten times to represent a byte of data. The receive sequence contains all of the information defined on the standard MII receive path.

CRS	RX_DV	RXD0	RXD1	RXD2	RXD3	RXD4	RXD5	RXD6	RXD7
X	0	RXER from previous frame	Speed 0 =10Mbps 1 =100Mbps	Duplex 0 = Half 1 = Full	Link 0 = Down 1 = Up	Jabber 0 = OK 1 = Detected	Upper Nibble 0 = Invalid 1 = Valid	False Carrier 0 = OK 1 = Detected	1
X	1	One Data Byte (Two MII Data Nibbles)							

SMII Reception Encoding

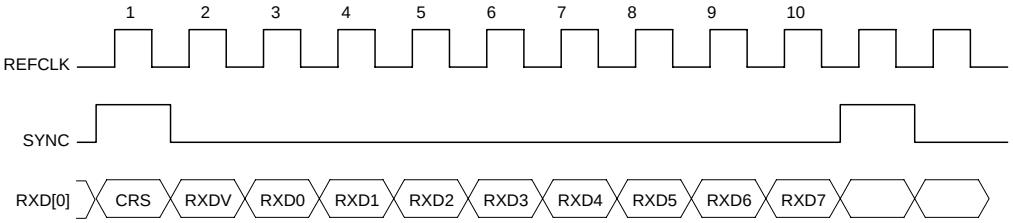

SMII Reception

Transmit Path

Transmit data and control information are signaled in 10-bit segments. SYNC signal is used to delimit the 10-bit segments. MAC is responsible to generate these SYNC pulses every ten clocks. For 100Mbps mode, each segment represents a byte of data. However, for 10Mbps mode, each segment is repeated ten times to represent a byte of data.

TXER	TXEN	TXD0	TXD1	TXD2	TXD3	TXD4	TXD5	TXD6	TXD7
X	0	X	X	X	X	X	X	X	X
X	1	One Data Byte (Two MII Data Nibbles)							

SMII Transmission Encoding

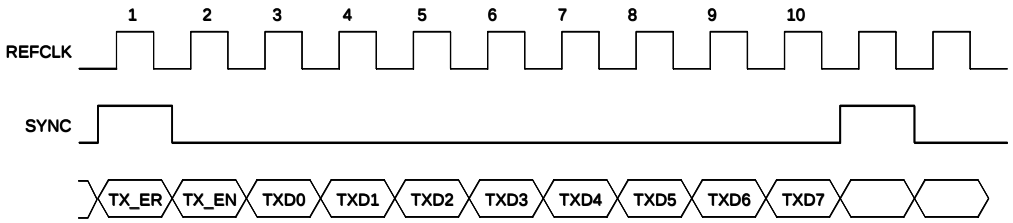

SMII Transmission

Collision Detection

The RTL8208 does not indicate that a collision has occurred. It is left up to the MAC to detect the assertion of both CRS_DV and TX_EN.

7.5.3 SS-SMII (Source Synchronous -Serial MII)

Source-Synchronous SMII is designed for applications requiring a trace delay of more than 1ns. Three signals are added to the SMII interface: RX_SYNC, RX_CLK, TX_CLK; and the SYNC of SMII is modified to TX_SYNC in SS-SMII.

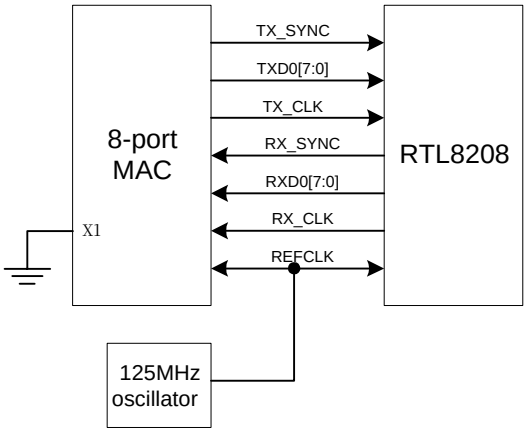

SS-SMII Signal Diagram

Receive Path

Receive data and control information are signaled in 10-bit segments. RX_SYNC signal is used to delimit the 10-bit segments. RTL8208 is responsible to generate these RX_SYNC pulses every ten clocks. For 100Mbps mode, each segment represents a byte of data. However, for 10Mbps mode, each segment is repeated ten times to represent a byte of data. The receive sequence contains all of the information defined on the standard MII receive path.

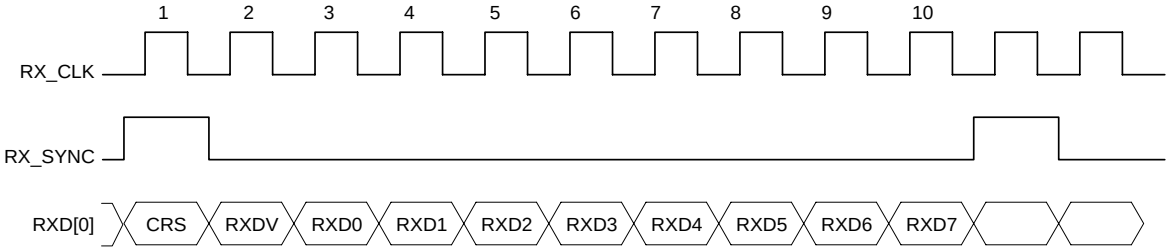

SS-SMII Reception

Transmit Path

Transmit data and control information are signaled in 10-bit segments. TX_SYNC signal is used to delimit the 10-bit segments. MAC is responsible to generate these TX_SYNC pulses every ten clocks. For 100Mbps mode, each segment represents a byte of data. However, for 10Mbps mode, each segment is repeated ten times to represent a byte of data. The receive sequence contains all of the information defined on the standard MII receive path. The PHY can sample one of the ten segments.

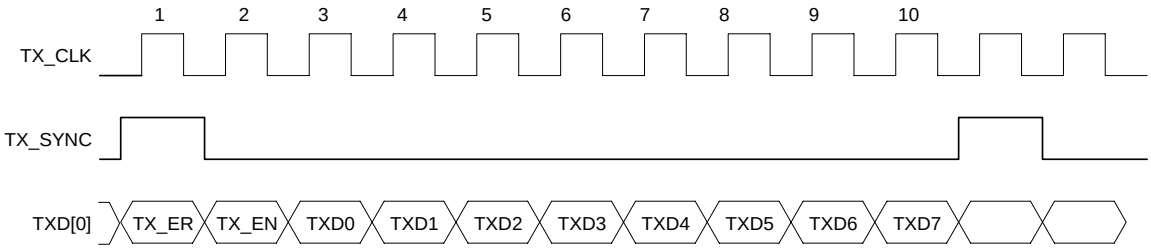

SS-SMII Transmission

Collision Detection

The RTL8208 does not indicate that a collision has occurred. It is left up to the MAC to detect the assertion of both CRS_DV and TX_EN.

7.7 Power Saving and Power Down Mode

7.7.1 Power Saving Mode

The RTL8208 implements a power saving mode on a per port basis. One port automatically enters power saving mode 10 seconds after the cable is disconnected from it, regardless of whether the RTL8208's operation mode is Nway or Force mode. Once one port enters power saving mode, it transmits normal link pulses only on its TXOP/TXON pins and keeps monitoring RXIP/RXIN to try to detect any incoming signals , which might be 100Base-TX MLT-3 idle pattern, 10Base-T link pulses or Nway's FLP (fast link pulses). After it detects any incoming signals, it wakes up from the power saving mode and operates in the normal mode according to the result of the connection.

Power saving mode is not supported when in 100FX operation.

7.7.2 Power Down Mode

Setting Register 0.11through the SMI interface forces the corresponding port of the RTL8208 to enter power down mode, which disables all transmit/receive functions and RMII functions on that port, except SMI (MDC/MDIO management interface).

7.8 LED Configuration

The RTL8208 supports serial LED status streams for LED display. The forms of LED status streams, as shown below, are controlled by LEDMODE[1:0] pins, which are latched upon reset. All LED statuses are represented as active-low, except Link/Act in Bi-color LED mode, whose polarity depends on Spd status.

LEDMODE[1:0]	Mode	Output sequences
00	3-bit serial stream	Col/Fulldup, Link/Act, Spd
01	2-bit serial stream	Spd, Link/Act
10	3-bit for Bi-color LED	Col/Fulldup, Link/Act, Spd

LED Statuses	Description
Col/Fulldup	Col, Full duplex Indicator. Blinking every 43ms when collision happens. Low for full duplex, and high for half duplex mode.
Link/Act	Link, Activity Indicator. For 3-bit serial stream mode, low for link established. For 3-bit Bi-color LED mode, Link/Act is high for link established when speed is low (100Mb/s); Link/Act is low for link established when speed is high (10Mb/s). Link/Act Blinks every 43ms when the corresponding port is transmitting or receiving.
Spd	Speed Indicator. Low for 100Mb/s, and high for 10Mb/s.

7.8.1 LED Blinking Time

LED blinking time can be set to 120ms by setting LED_BLNK_TIME=0. The LED statuses supporting 43/120ms blinking time are Col/Fulldup, Link/Act. For status Link/Act/Spd, the LED blinking time is not affected by LED_BLNK_TIME.

7.8.2 Serial Stream Order

Every bit stream is output port by port, from port0 to port7 with Col/Fulldup as the first bit in a port stream. For 2-bit serial stream mode, the sequence is Spd, then Link/Act. The following diagrams illustrate the sequences in 3-bit and 2-bit serial stream mode.

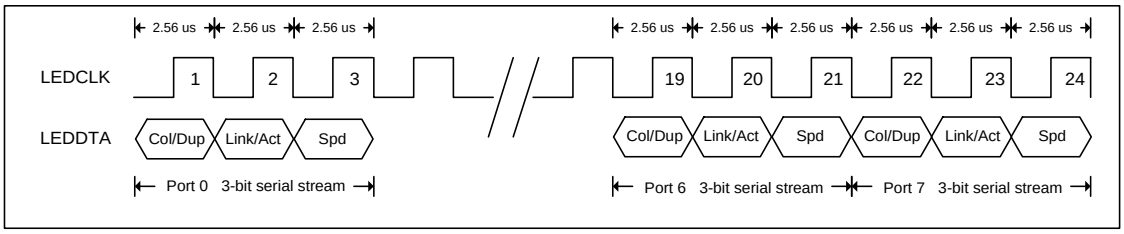

3-Bit Serial Stream Mode

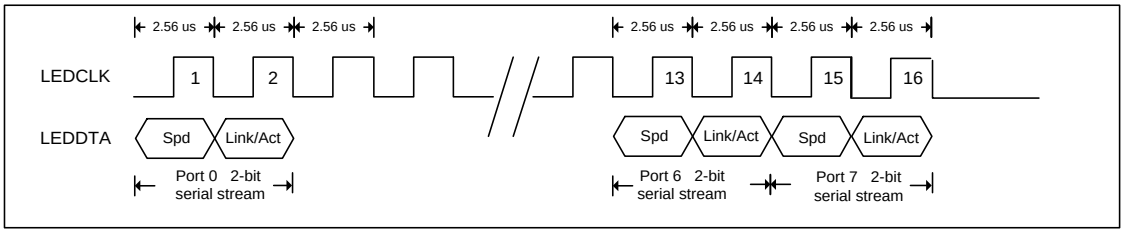

2-Bit Serial Stream Mode

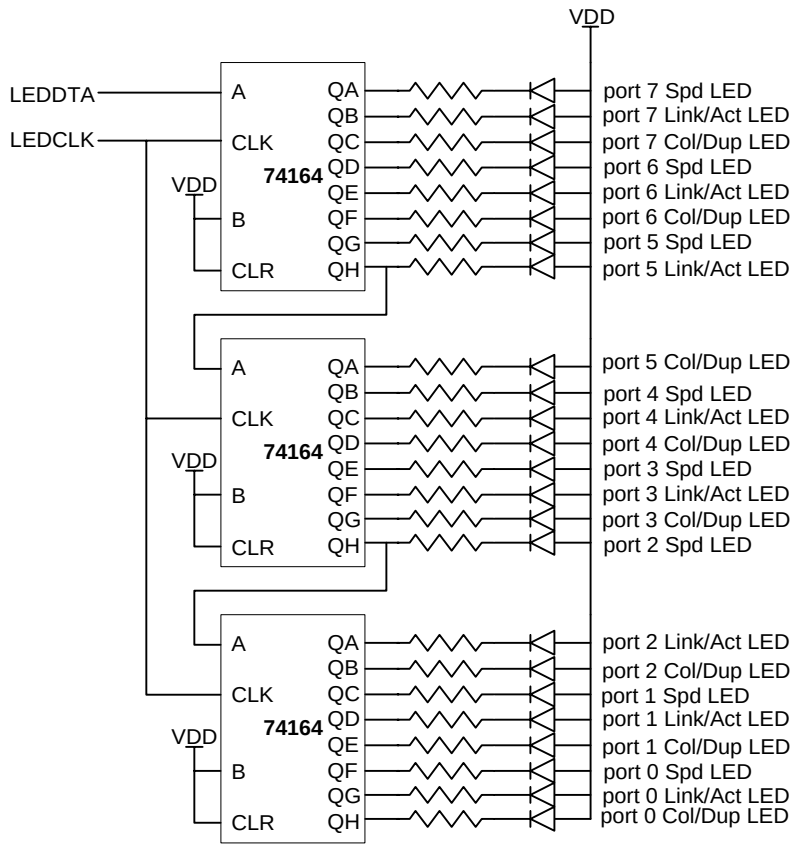

External circuit for 3-bit serial LED mode

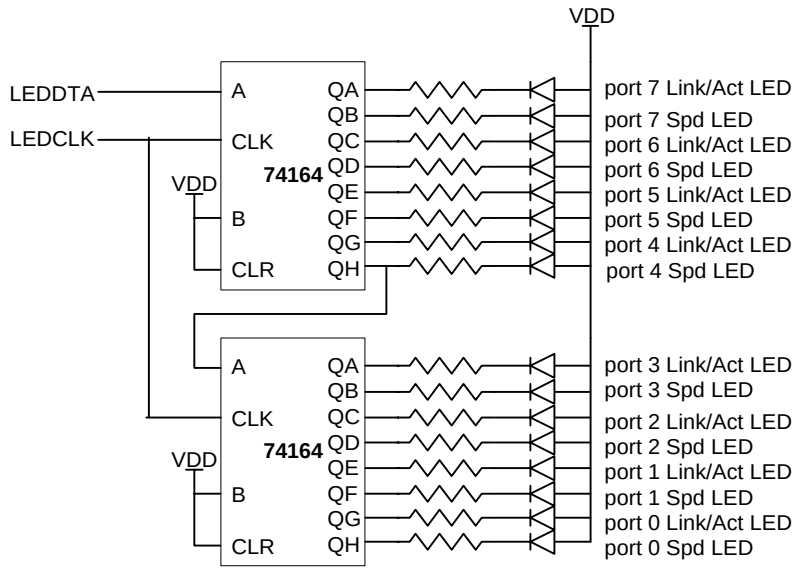

External circuit for 2-bit serial LED mode

7.8.3 Bi-Color LED

For 3-bit Bi-color LED mode, Link/Act and Spd are used for one Bi-color LED package, which is a single LED package with two LEDs connected in parallel with opposite polarities.

Spd	Link/Act	Indication	Bi-Color state
0	0	No Link	Off
0	1	100Mb/s Link up	Green
1	0	10Mb/s Link up	Yellow

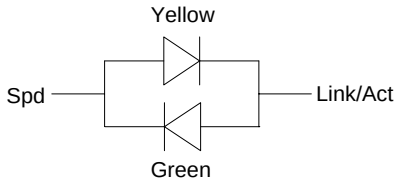

7.9 Crossover Detection and Auto Correction

During the link setup phase, the RTL8208 checks for reception of active signals on every port to determine if a connection can be established. If the receive data pin pair is connected to receive pin pair of the peer device (and vice versa), the RTL8208 will automatically change its configuration to swap receive data pins with transmit data pins. In other words, the RTL8208 can adapt automatically to a peer device's configuration. If a port is connected to a PC or NIC with an MDI-X interface with a crossover cable, the RTL8208 will reconfigure the port to provide an MDI-X interface to ensure a proper connection. This will effectively replace the eight-DIP switch commonly used for reconfiguring a port on a hub or switch.

By pulling-up EN_AUTOXOVER, the RTL8208 can identify the type of connected cable to adjust its port as for MDI or MDIX operation. When switching to MDI mode, the RTL8208 uses TXOP/N as transmit pairs, and when switching to MDIX mode, the RTL8208 uses RXIP/N as transmit pairs. The same is true for the receive pairs. This function is port-based implemented. Pulling-down EN_AUTOXOVER will disable this function and the RTL8208 operates in MDI mode, in which TXOP/N represents transmit pairs and RXIP/N represents receive pairs.

7.10 Polarity Detection and Auto Correction

For better noise immunity and lower interference to ambient devices, the Ethernet electrical signal on a twisted pair cable is transmitted in differential forms. That is, the signal is transmitted on two wires for each direction with inverse polarities (+/-). If wiring on the connector is faulty or a faulty transformer is used, the two inputs to a transceiver may carry signals with opposite but incorrect polarities. As a direct consequence, the transceiver will not work properly.

When the RTL8208 operates in 10Base-T mode, it automatically reverses the polarity of its two receiver input pins if it detects that the polarities of the incoming signals on the pins are incorrect. However, this feature is unnecessary when the RTL8208 is operating in 100Base-TX mode.

7.11 2.5V Power Generation

The RTL8208 uses a PNP transistor to generate 2.5V from the 3.3V power supply. This 2.5V provides for digital core and analog receive circuits. Once your system needs more than one RTL8208 chip (greater than 8 ports), do not use one PNP transistor for all of the RTL8208 chips even if the rating is enough. Instead, use one transistor for each RTL8208.

Do not connect any beads directly between the collector of PNP transistor and VDDAL. This will affect the stability of the 2.5V power significantly if the bead exists.

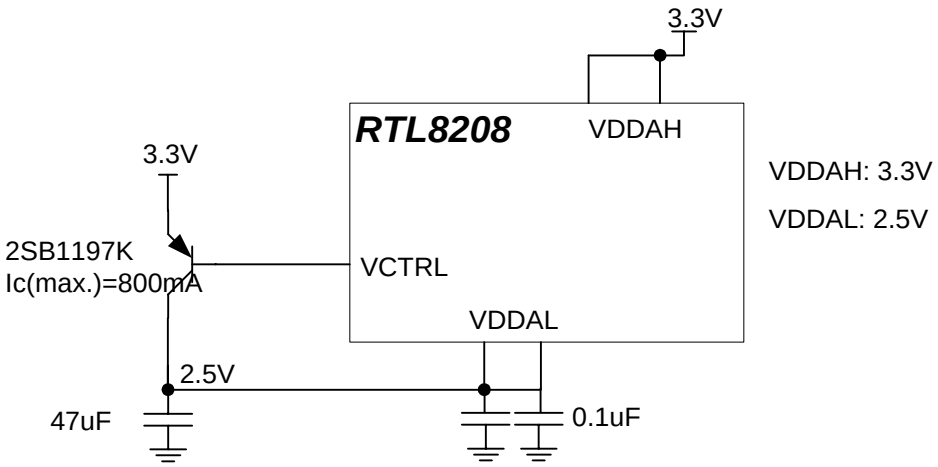

Using a PNP Transistor to Produce 2.5V

The power transistor is a 2SB1197K, and follows the following specifications.

Absolute maximum ratings (Ta=25°C)

Parameter	Symbol	Limits	Unit
Collector-base voltage	V_{CBO}	-40	V
Collector-emitter voltage	V_{CEO}	-32	V
Emitter-base voltage	V_{EBO}	-5	V
Collector current	I_C	-0.8	A(DC)
Collector power dissipation	P_C	0.2	W
Junction temperature	Tj	150	°C
Storage temperature	Tstg	-55~+150	°C

For more information, refer to http://www.rohm.com

8. Design and Layout Guide

In order to achieve maximum performance for the RTL8208, good design attention is required throughout the design and layout process. The following recommendations can help to implement a high performance system.

8.1 General Guidelines

- Create a good power source, minimizing noise from switching power supply circuits.
- Verify the quality of the components, such as clock source and transformer, to meet the application requirements.
- Keep power and ground noise levels below 150mV.
- Use bulk capacitors (4.7uF-10uF) between the power and ground planes.
- Use 0.1uF decoupling capacitors to reduce high-frequency noise on the power and ground planes.
- Keep decoupling capacitors as close as possible to the RTL8208 power pins.
- Provide termination for all TXOP/N and RXIP/N.

8.2 Differential Signal Layout Guidelines

- Keep differential pairs as close as possible and route both traces as identically as possible.
- Avoid vias and layer changes if possible.
- Keep the different pairs away from each other.

8.3 Clock Circuit

- The clock should be 25M/50MHz/125MHz 100ppm with jitter less than 0.5ns.
- If use 50MHz or 125MHz as clock source, make the length of clock path to RTL8208 equal to the length to MAC as possible. The length difference should under 1 inch.
- If use 50MHz, please put a damping resistor at clock source side.
- If possible, make clock trace smooth, strait, and surrounded by ground traces to minimize high-frequency emissions.

8.4 2.5V power

- Do not connect a bead directly between the collector of the PNP transistor and VDDAL. This will affects the stability of the 2.5V power significantly if a bead exists.
- Use a bulk of capacitor (4.7uF-10uF) between the collector of PNP transistor and ground plane.
- Do not use one PNP transistor for more than one RTL8208 chip, even if the rating is enough. Use one transistor for each RTL8208.

8.5 Power Planes

- If the layout board size is small, it is better not to divide the power plane into digital and analog power planes.
- Use 0.1uF decoupling capacitors and bulk capacitors between power plane and ground plane.

8.6 Ground Planes

- If the layout board size is small, keep the system ground region as one continuous, unbroken plane.
- Place a moat (gap) between the system ground and chassis ground.
- For better ESD test performance, please use iron case, and put screw to connect frame ground to iron case.

8.7 Transformer Options

- The magnetics support 1:1 turn ratio on both the transmit and receive paths are valid for RTL8208. There are many vendors improving their magnetics design to meet this requirement, and several are listed below.

Vendor	Model	Vendor	Model
Pulse	H1164	BothHand	40ST1041AX
Magnetic 1	ML164	GTS	FC-638L

- The center-tap of the primary side of the transformer should not be connected to ground with capacitors, because of the RTL8208's special design.

9. Application information

9.1 10Base-T/100Base-TX Application

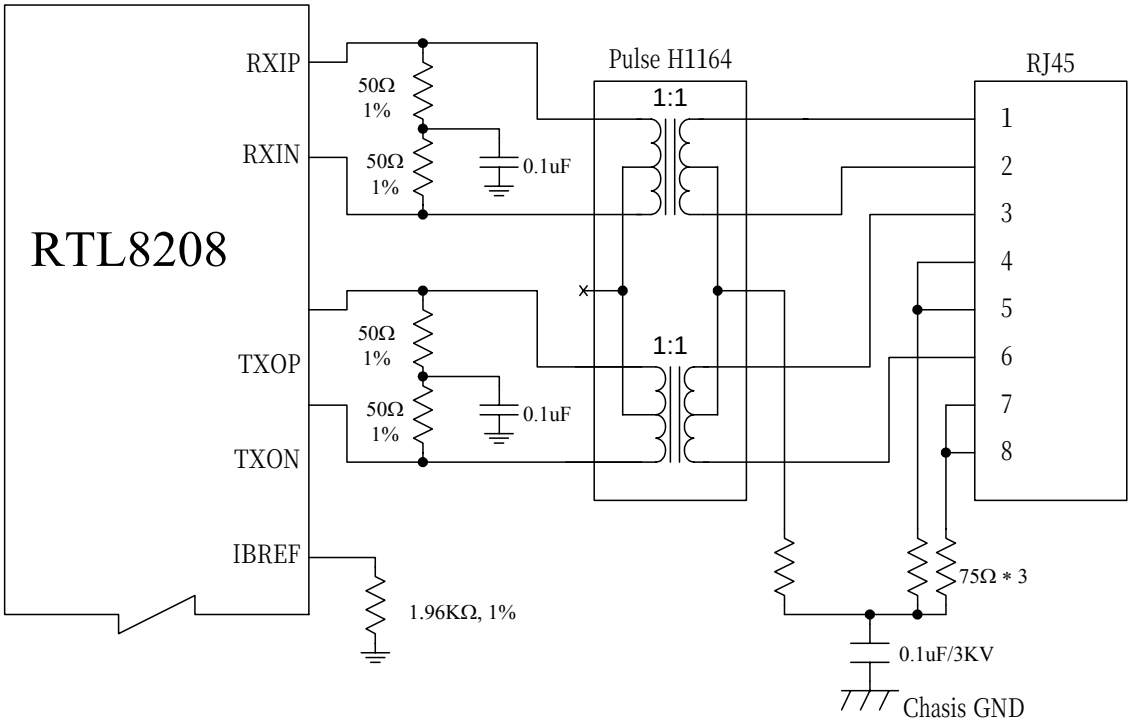

10Base-T/100Base-TX Diagram

The Central Tap in the primary side of H1164 must be left floating, and cannot be bypassed to GND via capacitor.

9.2 100Base-FX Application

(3.3V fiber transceiver)

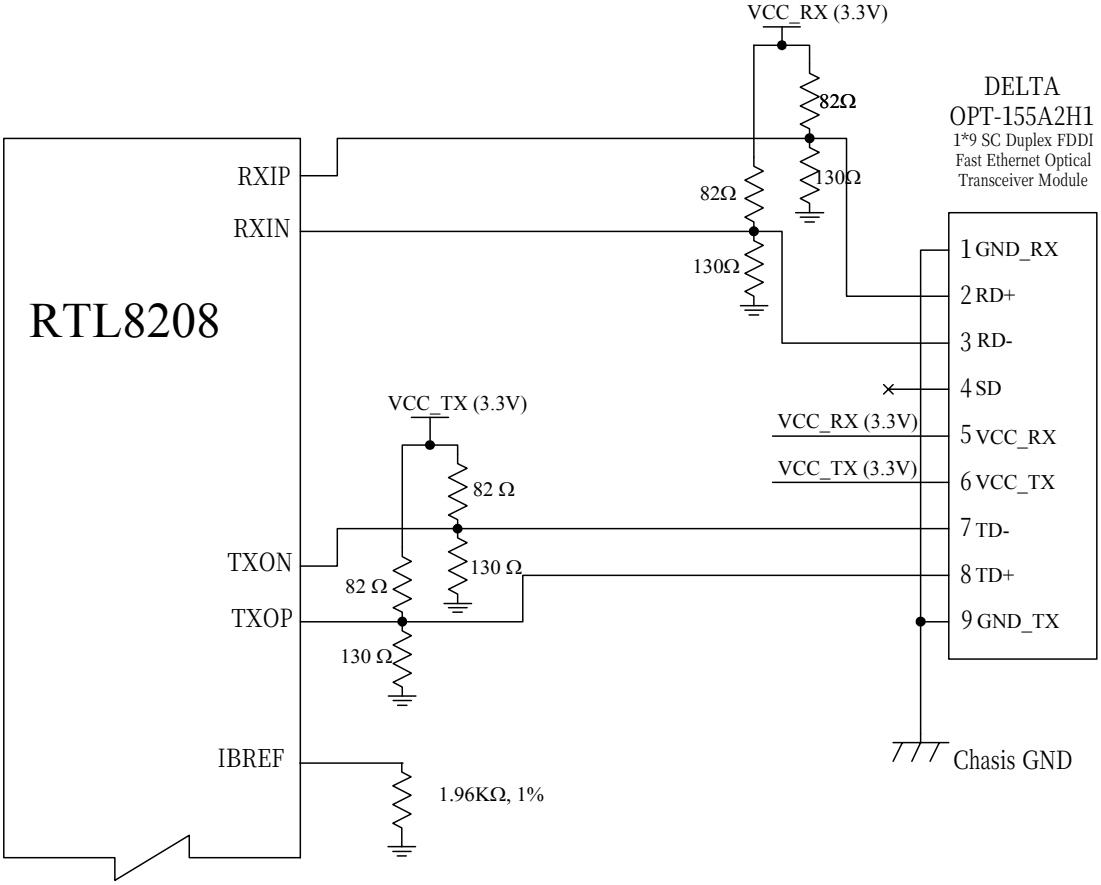

100Base-FX Application (3.3V Fiber Transceiver)

10. Electrical Characteristics

10.1 Absolute Maximum Ratings

WARNING: Absolute maximum ratings are limits beyond which may cause permanent damage to the device or affect device reliability. All voltages are specified reference to GND unless otherwise specified.

Parameter	Minimum	Maximum	Units
Storage Temperature	-55	+150	°C
Vcc Supply Referenced to GND	-0.5	+4.0	V
Digital Input Voltage	-0.5	VDD	V
DC Output Voltage	-0.5	VDD	V

10.2 Operating Range

Parameter	Minimum	Maximum	Units
Ambient Operating Temperature(Ta)	0	+50	°C
3.3V Supply Voltage Range(VDDAH)	3.15	3.45	V
2.5V Supply Voltage Range(VDDAL,VDD)	2.375	2.625	V

10.3 DC Characteristics

Parameter	Symbol	Conditions	Min	Typical	Max	Units
Power Supply Current for 2.5V	Icc	10 Base-T, idle 10 Base-T, Peak continuous 100% utilization 100 Base-TX, idle 100 Base-TX, Peak continuous 100% utilization Power saving Power down		81.2 88.9 125.5 145.7 76.7 15.5		mA
Power Supply Current for 3.3V	Icc	10 Base-T, idle 10 Base-T, Peak continuous 100% utilization 100 Base-TX, idle 100 Base-TX, Peak continuous 100% utilization Power saving Power down		88.5 499.2 370.7 371.3 48.1 3.3		mA
Total Power Consumption for all 8 ports	PS	10 Base-T, idle 10 Base-T, Peak continuous 100% utilization 100 Base-TX, idle 100 Base-TX, Peak continuous 100% utilization Power saving Power down		495 1870 1537 1590 350 50		mW
TTL Input High Voltage	V_{ih}		1.5			V
TTL Input Low Voltage	V_{il}				1.0	V
TTL Input Current	I_{in}		-10		10	uA
TTL Input Capacitance	C_{in}			3		pF
Output High Voltage	V_{oh}		2.25		2.75	V
Output Low voltage	V_{ol}		0		0.25	V

Parameter	SYM	Conditions	Min	Typical	Max	Units
Output Tristate Leakage Current	$\|I_{OZ}\|$				10	uA
Transmitter, 100Base-TX (1:1 Transformer Ratio)						
TX+/- Output Current High	I_{OH}				20	mA
TX+/- Output Current Low	I_{OL}		0			uA
Transmitter, 10Base-T(1:1 Transformer Ratio)						
TX+/- Output Current High	I_{OH}				50	mA
TX+/- Output Current Low	I_{OL}		0			uA
Receiver, 100Base-TX						
RX+/- Common-mode input voltage				1.6		V
RX+/- Differential input resistance				20		kΩ
Receiver, 10BaseT						
Differential Input Resistance				20		kΩ
Input Squelch Threshold				340		mV

10.4 AC Characteristics

Parameter	SYM	Conditions	Min	Typical	Max	Units
Transmitter, 100Base-TX						
Differential Output Voltage, peak-to-peak	V_{OD}	50Ω from each output to Vcc, Best-fit over 14 bit times		1.938		V
Differential Output Voltage Symmetry	V_{OS}	50Ω from each output to Vcc, |Vp+|/|Vp-|		99.3		%
Differential Output Overshoot	V_{OO}	Percent of Vp+ or Vp-		3.29		%
Rise/Fall time	t_r ,t_f	10-90% of Vp+ or Vp-		4.3/3.4		ns
Rise/Fall time imbalance	$\|t_r - t_f\|$			910		ps
Duty Cycle Distortion		Deviation from best-fit time-grid, 010101 … Sequence		±175		ps
Timing jitter		Idle pattern		1.0		ns
Transmitter, 10Base-T						
Differential Output Voltage, peak-to-peak	V_{OD}	50Ω from each output to Vcc, all pattern		4.27		V
TP_IDL Silence Duration		Period of time from start of TP_IDL to link pulses or period of time between link pulses	10.5		15.75	ms
TD Short Circuit Fault Tolerance		Peak output current on TD short circuit for 10 seconds.				mA
TD Differential Output Impedance (return loss)		Return loss from 5MHz to 10MHz for reference resistance of 100 Ω.	12.4		25.5	dB
TD Common-Mode Output Voltage	Ecm	Terminate each end with 50Ω resistive load.				mV
Transmitter Output Jitter						ns
RD Differential Output Impedance (return loss)		Return loss from 5MHz to 10MHz for reference resistance of 100Ω.	14		25	dB
Harmonic Content		dB below fundamental, 20 cycles of all ones data				dB
Start-of-idle Pulse width		TP_IDL width				ns

10.5 Digital Timing Characteristics

Parameter	SYM	Conditions	Min	Typical	Max	Units
100Base-TX Transmit System Timing						
Active TX_EN Sampled to first bit of "J on MDI output				11	12	Bits
Inactive TX_EN Sampled to first bit of "T on MDI output				15	16	Bits
TX Propagation Delay	t_{TXpd}	From TXD[1:0] to TXOP/N		11	12	Bits
100Base-TX Receive System Timing						
First bit of "J on MDI input to CRS_DV assert		From RXIP/N to CRS_DV		6	8	Bits
First bit of "T on MDI input to CRS_DV de-assert		From RXIP/N to CRS_DV		16	18	Bits
RX Propagation Delay	t_{RXpd}	From RXIP/N to RXD[1:0]		15	17	Bits
10Base-T Transmit System Timing						
TX Propagation Delay	t_{TXpd}	From TXD[1:0] to TXOP/N		5	6	Bits
TX_EN to MDI output		From TX_EN assert to TXOP/N		5	6	Bits
10Base-T Receive System Timing						
Carrier Sense Turn-on delay	t_{CSON}	Preamble on RXIP/N to CRS_DV asserted		12		Bits
Carrier Sense Turn-off Delay	t_{CSOFF}	TP_IDL to CRS_DV de-asserted		8	9	Bits
RX Propagation Delay	t_{RXpd}	From RXIP/N to RXD[1:0]	9		12	Bits
LED timing						
LED On Time	t_{LEDon}	While LED blinking	43		120	ms
LED Off Time	t_{LEDoff}	While LED blinking	43		120	ms
Jabber timing (10Base-T only)						
Jabber Active		From TX_EN=1 to Jabber asserted	60	70	80	ms
Jabber de-assert		From TX_EN=0 to Jabber de-asserted	60		80	ms
RMII Timing						
TXD, TX_EN Setup time		TXD [1:0], TX_EN to REFCLK rising edge setup time	2			ns
TXD, TX_EN Hold time		TXD [1:0], TX_EN to REFCLK rising edge hold time	2			ns
RXD, CRSDV, RXER to REFCLK delay		Output delay from REFCLK rising edge to RXD [1:0], CRSDV, RXER	4			ns
SMII Timing						
TXD, SYNC Setup time		TXD, SYNC to REFCLK rising edge setup time	2			ns
TXD, SYNC Hold time		TXD SYNC to REFCLK rising edge hold time	2			ns
RXD, to REFCLK delay		Output delay from REFCLK rising edge to RXD	2.5		3.5	ns
SMI Timing						
MDC		MDC clock rate			25	MHz
MDIO Setup Time		Write cycle	10			ns
MDIO Hold Time		Write cycle			10	ns
MDIO output delay relative to rising edge of MDC		Read cycle			10	ns

10.6 Thermal Data

Heat generated by the chip causes the temperature rise of the package. If the temperature of the chip (Tj, junction temperature) is beyond the design, there will be negative effects on operation and the life of IC package. It's necessary to develop a switch with a reasonable environment (Ta, ambient temperature) in a closed case to achieve a stable and reliable system, via supporting sufficient heat dissipation capability either through heat sink or electrical fan. However, to estimate the possible Ta is necessary since as the power density increases, the thermal management is getting more critical.

Thermal parameters are defined as below according to JEDEC standard JESD 51-2, 51-6:

1. θja(Thermal resistance from junction to ambient), represents the resistance to the heat flows from the chip to ambient air. It's an index of heat dissipation capability. Lower θja means better thermal performance.

   θja = (Tj - Ta) / Ph

   Where Tj is the junction temperature

   Ta is the ambient temperature

   Ph is the power dissipation

2. θjc (Thermal resistance from junction to case), represents the resistance to the heat flows from the chip to package top case. θjc is important when external heat sink is attached on package top.

   θjc = (Tj - Tc) / Ph, where Tj is the junction temperature

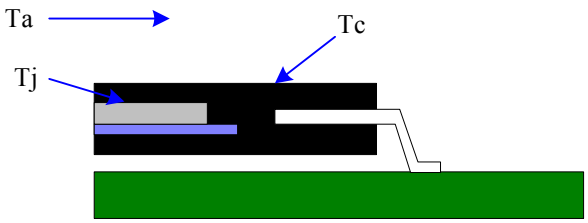

Cross-section of 128 PQFP

Thermal Operating Range

Parameter	SYM	Conditions	Min	Typical	Max	Units
Junction operating temperature	Tj		0	25	125	°C
Ambient operating temperature	Ta		0	25	65	°C

Thermal resistances

Parameter	SYM	Conditions	Min	Typical	Max	Units
Thermal resistance: junction to ambient	θja	2 layer PCB, 0 ft/s airflow		30.1		°C/W
Thermal resistance: junction to case	θjc	2 layer PCB, 0 ft/s airflow		14.4		°C/W

* PCB conditions (JEDEC JESD51-7) :
  dimensions : 76.2 x 114.3 mm, thickness : 1.6mm

11. Mechanical Dimensions

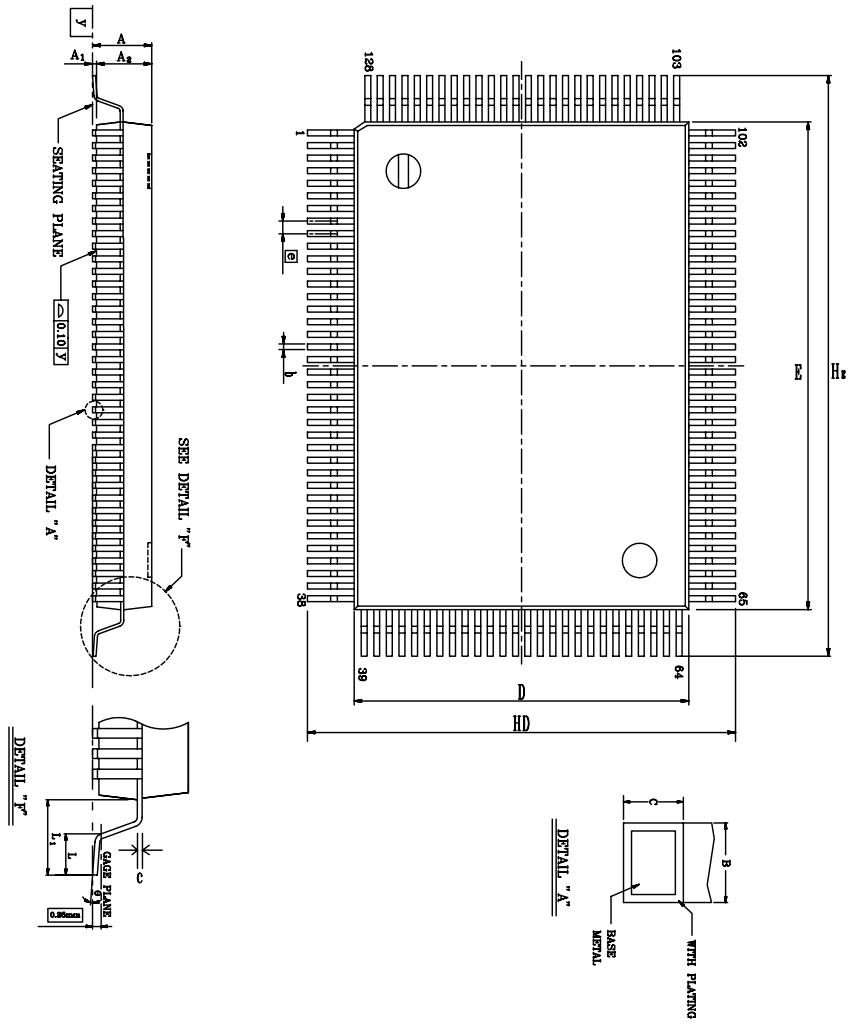

Symbol	Dimension in inch			Dimension in mm		
	Min	Typical	Max	Min	Typical	Max
A	-		0.134	-	-	3.40
A1	0.004	0.010	0.036	0.10	**0.25**	0.91
A2	0.102	0.112	0.122	2.60	**2.85**	3.10
b	0.005	0.009	0.013	0.12	**0.22**	0.32
c	0.002	0.006	0.010	0.05	**0.15**	0.25
D	0.541	0.551	0.561	13.75	**14.00**	14.25
E	0.778	0.787	0.797	19.75	**20.00**	20.25
e	0.010	0.020	0.030	0.25	**0.5**	0.75
HD	0.665	0.677	0.689	16.90	**17.20**	17.50
HE	0.902	0.913	0.925	22.90	**23.20**	23.50
L	0.027	0.035	0.043	0.68	**0.88**	1.08
L1	0.053	0.063	0.073	1.35	**1.60**	1.85
Y	-	-	0.004	-	-	0.10
Θ	0°	-	12°	0°	-	12°

1. Dimension D & E do not include interlead flash.
2. Dimension b does not include dambar protrusion/intrusion.
3. Controlling dimension : Millimeter
4. General appearance spec. should be based on final visual inspection spec.

TITLE : **128 QFP** (14x20 mm) PACKAGE OUTLINE -CU L/F, FOOTPRINT 3.2 mm			
LEADFRAME MATERIAL :			
APPROVE		DOC. NO.	530-ASS-P004
		VERSION	1
		PAGE	OF
CHECK		DWG NO.	Q128 - 1
		DATE	Oct. 08 1998
REALTEK SEMI-CONDUCTOR CO., LTD			

Realtek Semiconductor Corp.
Headquarters
1F, No. 2, Industry East Road IX, Science-based
Industrial Park, Hsinchu, 300, Taiwan, R.O.C.
Tel: 886-3-5780211 Fax: 886-3-5776047
WWW: www.realtek.com.tw